R-25-150

RESOLUTION NO. _____

A RESOLUTION WAIVING FORMAL BIDDING REQUIREMENTS TO UPGRADE TRANSMISSION FACILITIES AT FAULKNER LAKE SUBSTATION; AUTHORIZING THE MAYOR AND CITY CLERK TO EXECUTE A CONTRIBUTION FOR CONSTRUCTION COSTS AGREEMENT WITH ENTERGY ARKANSAS, INC.; AND FOR OTHER PURPOSES.

WHEREAS, Ark. Code Ann. § 14-58-303 requires City purchases exceeding the amount of $42,921 to follow statutory procedures of local advertisement and opening of sealed bids which may only be waived in exceptional situations where bidding is deemed not feasible or practical; and

WHEREAS, the North Little Rock Electric Department ("NLRED") anticipates load growth in the area served by its Faulkner Lake Substation; and

WHEREAS, in order to meet the expected increased load, NLRED needs to add an additional transformer to the substation; which will require construction of additional electric transmission facilities to accommodate the new transformer; and

WHEREAS, Entergy Arkansas, Inc. ("EAI") has completed a cost estimate to upgrade its transmission facilities at an estimated cost of $8,553,255 (see proposed Contribution for Construction Costs Agreement attached hereto as Exhibit A, which includes the cost estimate as an exhibit to the agreement).

NOW, THEREFORE, BE IT ORDAINED BY THE CITY COUNCIL OF THE CITY OF NORTH LITTLE ROCK, ARKANSAS:

SECTION 1: That formal bidding is hereby waived, and the Mayor and City Clerk are hereby authorized to enter into a Contribution for Construction Costs Agreement with Entergy Arkansas, Inc. (substantially similar to Exhibit A attached hereto).

SECTION 2: That the initial benchmark payment in the amount of $2,750,000 is included in NLRED's 2025 Budget; and future benchmark payments will be included in subsequent years' budgets to be presented to the City Council.

SECTION 3: That all ordinances or parts of ordinances in conflict herewith are hereby repealed to the extent of the conflict.

SECTION 4: That the provisions of this Ordinance are hereby declared to be severable, and if any section, phrase or provision shall be declared or held invalid, such invalidity shall not affect the remainder of the sections, phrases or provisions.

SECTION 5: It is hereby found and determined that the adoption of this Ordinance is immediately necessary to insure the proper and orderly growth of the City of North Little Rock, Arkansas and is necessary for the immediate preservation of the public health, safety and welfare; THEREFORE, an emergency is hereby declared to exist, and this Ordinance shall be in full force and effect from and after its passage and approval.

ADOPTED:

APPROVED:

Mayor Terry C. Hartwick

SPONSOR:

Terry C. Hartwick

Mayor Terry C. Hartwick by AF

ATTEST:

Diane Whitbey, City Clerk

APPROVED AS TO FORM:

Amy Beckman Fields, City Attorney

PREPARED BY THE OFFICE OF THE CITY ATTORNEY/ABF

FILED 10:23 A.M. _____ P.M.

By Amy Fields

DATE 9-2-25

Diane Whitbey, City Clerk and Collector
North Little Rock, Arkansas

RECEIVED BY

EXHIBIT A

CONTRIBUTION FOR CONSTRUCTION COSTS
Agreement between

Entergy Arkansas, LLC

AND

NLRED (North Little Rock Electric Department)

This Agreement for Contribution For Construction Costs (this "Agreement") is made and entered this ___ day of _____ 2025 between Entergy Arkansas, LLC ("Company") and North Little Rock Electric Department (the "Customer").

RECITALS

WHEREAS, Company is an electric utility providing transmission and distribution service in Arkansas;

WHEREAS, Customer wants to add a 50MVA transformer to address load growth in the area ("Project") and has requested that Company construct additional electric facilities to accommodate the Project ("Transmission Facilities Upgrades");

WHEREAS, Company has completed a Class 5 estimate ("Estimate") (a copy of which is incorporated herein and attached hereto as **Exhibit "A"**) outlining the scope and estimated cost and construction duration of the Transmission Facilities Upgrades;

WHEREAS, Customer has agreed to fund all actual costs for the Transmission Facilities Upgrades in the form of cash contributions, as described more fully herein;

NOW, THEREFORE, for and in consideration of the mutual covenants set forth herein, and other good and valuable consideration, receipt and sufficiency of which is hereby acknowledged, Company and Customer hereby agree as follows:

1. Company agrees to conduct the engineering work, design work, procurement of materials and construct the Transmission Facilities Upgrades as more fully described in Exhibit A.

2. Customer shall pay Company for all costs associated with the Transmission Facilities Upgrades, including but not limited to, materials costs, labor costs, labor costs adders, costs associated with third party vendors and consultants, costs associated with securing all necessary approvals, taxes, capital suspense charges, overheads and associated tax gross up charges ("Construction Costs"). As of the date of this Agreement, the Construction Costs are estimated at Eight Million Five-Hundred Fifty-Three Thousand, Two-Hundred Fifty-Five Dollars ($8,553,255) (hereinafter referred to as "Transmission Facilities Cost Estimate"). It is understood that many variables, known and unknown, may impact this Transmission Facilities Cost Estimate significantly. However, irrespective of a change in the Transmission Facilities Cost Estimate, Customer agrees that all such costs expended by Company associated with the Transmission Facilities Upgrades shall be considered Construction Costs.

3. Customer shall pay the Transmission Facilities Cost Estimate immediately upon receipt of invoice per milestone payment schedule shown in **Exhibit "B."** Company shall have no obligation to begin the work contemplated under this Agreement until the Transmission Facilities Cost Estimate payment is received by Customer. It is expressly understood that Company may, from time to time, modify its Transmission Facilities Cost Estimate, based upon its most current information regarding the Project.

4. If there is a change in the Construction Costs, Company shall notify Customer of any additional payment amounts in writing and the modified payment amount shall be invoiced to Customer and Customer shall remit payment to Company in accordance with the instructions set forth on the invoice. If Customer fails to make payments in accordance with the instructions set forth on the invoice, Company, in its sole discretion, may immediately cease all activity on the Project. Company shall resume activity on the Project within 30 days of the date that full payment of all outstanding invoices is received, subject to the availability of Company crews and equipment. TO THE FULLEST EXTENT ALLOWED BY LAW, CUSTOMER FULLY INDEMNIFIES, RELEASES AND HOLDS HARMLESS COMPANY FOR ANY AND ALL DAMAGES, LOSSES, CLAIMS AND

CAUSE OF ACTION, INCLUDING BUT NOT LIMITED TO DAMAGES ASSOCIATED WITH LOSS OF REVENUES, LOSS OF PRODUCT AND SPECIAL, CONSEQUENTIAL AND INDIRECT DAMAGES, RESULTING FROM COMPANY'S CESSATION OF ACTIVITY OR ANY DELAY IN RESUMING ACTIVITY CAUSED BY CUSTOMER'S FAILURE TO PAY IN ACCORDANCE WITH THE REQUIREMENTS OF THIS SECTION 5.

6. Unless otherwise indicated on any invoice, all payments shall be made via wire transfer or check pursuant to Company's instructions.

7. It is expressly understood that Customer shall be responsible for making timely payments of invoices irrespective of the completion of the Project.

8. Company reserves the right to terminate this Agreement for any of the following reasons: (1) the Arkansas Public Service Commission (APSC) takes any action that, in the opinion of Company, adversely affects the approval of the Transmission Facilities Upgrades , (2) the APSC or any other administrative agency or judicial body takes any action that, in the opinion of Company, modifies, alters or amends any of the terms and conditions of this Agreement or affects the intent of this Agreement that Company fully recover the Construction Costs, or results in an adverse effect to Company, (3) there is an occurrence that adversely affects Customer's financing of the Project, or (4) Customer fails to comply with any material terms of this Agreement. Termination of this Agreement shall be effective upon receipt by Customer of twenty-four (24) hours' advance written notification from Company of Company's desire to terminate the Agreement. In the event of termination, Customer shall remain responsible for all Construction Costs incurred by Company through the effective date of termination. In addition, Customer shall be responsible for any additional charges, including but not limited to, cancellation charges, demobilization charges, charges associated with the ordering and purchasing of materials incurred by Company, irrespective of termination. **To the fullest extent allowed by law, Customer fully indemnifies, releases and holds harmless Company for any and all damages, losses, claims and causes of action, including but not limited to damages associated with loss of revenues, loss of product and special, consequential and indirect damages, resulting from Company's termination of this Agreement.**

9. Customer shall have the right to cancel the Project and/or this Agreement at any time. Cancellation shall be effective upon receipt by Company of twenty-four (24) hours' advance written notification from Customer of Customer's desire to cancel. In the event of cancellation, Customer shall remain responsible for all Construction Costs incurred by Company through the effective date of cancellation. In addition, Customer shall be responsible for any additional charges incurred following the effective date of cancellation, including but not limited to, cancellation charges, demobilization charges, charges associated with the ordering and purchasing of materials incurred by Company, irrespective of cancellation.

10. It is expressly understood that this Agreement confers no ownership rights or interest to Customer in the facilities to be constructed by Company pursuant to this Agreement.

11. All notices, requests, consents and other communications hereunder shall be in writing and shall be dispatched by nationwide overnight courier service, such as (without limitation) FedEx, or by United States Certified Mail, Return Receipt Requested, postage prepaid, addressed to the parties as follows:

COMPANY: **Entergy Arkansas, LLC**
13019 Vimy Ridge Rd
Alexander, Arkansas 72002
Attn: Crystal Phillips
Telephone: 501-658-6307
Email: cphill7@entergy.com

CUSTOMER: **North Little Rock Electric Department**
1400 West Maryland Avenue
North Little Rock, AR 72120
Attn: Eric Heinrichs, Director of Engineering
Telephone: (501) 992-4086
Email: eheinrichs@nlr.ar.gov

Notices under this Agreement shall be deemed given upon the earlier of the date of delivery or the date upon which delivery is refused. Any changes in the names or addresses set out in this provision shall be through notice in conformity with the requirements of this provision.

12. Except as expressly allowed above, no waiver, addition, deletion, or modification of any provision contained in this Agreement shall be binding unless in writing and signed by duly-authorized representatives of both parties. Once an Amendment to this Agreement is made, it shall be deemed incorporated as of its effective date, unless expressly stated to the contrary in the Amendment.

13. Customer shall not assign this Agreement in whole or in part without the prior written consent of Company which consent may be withheld for any reason and any such purported assignment shall be null and void and, at Company's option, will constitute a material breach of this Agreement. No assignment of this Agreement, even if consented to by Company, shall relieve Customer of its responsibilities under this Agreement. Any assignee of Customer must agree in writing to all terms and conditions of this Agreement.

14. The failure of either party to insist upon or enforce, in any instance, strict performance by the other of any of the terms of this Agreement or to exercise any rights herein or therein conferred shall not be construed as a waiver or relinquishment to any extent of its rights to assert or rely upon any such terms or rights on any future occasion.

15. It is agreed that if any clause or provision of this Agreement is by the courts held to be illegal or void, the validity of the remaining portions and provisions shall not be affected, and the rights and obligations of the parties shall be enforced as if this Agreement did not contain such illegal or void clauses or provisions.

16. The provisions of this Agreement that by their nature continue shall survive any termination or cancellation of this Agreement, including all obligations or rights that exist as a result of an event or the failure of an event prior to or at the time of expiration or termination of this Agreement.

17. If this Agreement fully executed by Customer is not returned by September 24, 2025, this offer for engineering, design, procurement and construction of transmission facilities is invalid.

18. By its execution of this Agreement, Customer represents and warrants that it has secured all necessary approvals to enter this Agreement.

19. This Agreement shall be governed by and construed under the laws of the State of Arkansas.

IN WITNESS THEREOF, Company and Customer have caused this Agreement to be executed by their respective authorized officials.

Entergy Arkansas, LLC

By: _____ Witness: _____

Printed Name: _____ Witness: _____

Title: _____

North Little Rock Electric Department

By: _____ Witness: _____

Printed Name: _____ Witness: _____

Title: _____

Customer Billing Information:

Contact: Eric Heinrichs, Director of Engineering

Address: 1400 West Maryland Avenue

Or e-mail PDF Invoice to:

Eric Heinrichs

eheinrichs@nlr.ar.gov
Tax ID: 71-6009176

"EXHIBIT A"

Transmission Line & Substation Projects

Company: Entergy Transmission / EAL

Customer: NLRED (North Little Rock Electric Department)
Project Name: Faulkner Lake
Requested on 07/21/2025

INITIAL CLASS 5 COST ESTIMATE

Revision History			
Rev	**Issue Date**	**Description of Revision**	**Prepared By**
2	07/24/2025	Draft Submitted for Internal Review	KT
3	-	Final Revision Submitted for Customer Review	KT

DISCLAIMER

This document has been prepared without the benefit of detailed engineering, study data or analysis. The solution set specified herein reflects the current understanding of the proposed project and is valid for 60 calendar days following the final revision "Issue Date" indicated above. There are many unknown variables that exist at this time, which could significantly impact the scope of work and cost estimate detailed in this document. This document is provided "as is." Company makes no warranty or representation regarding the accuracy, completeness or usefulness of the information from this document, and expressly disclaims any and all warranties, whether express or implied, including, but not limited to, implied warranties of non-infringement, merchantability and fitness for a particular purpose. Customer agrees that Company will not be liable to Customer or any third party for any damages of any kind arising out of any use of the information from this document, whether based on tort, contract or other theories of recovery, even when Company has been advised of such possibility in advance. In order to proceed with the project, a Facilities Study will be developed, resulting in a more definitive scope of work and cost estimate; and if required in connection with any further scoping, design, material procurement or construction-related activities, a Reimbursement Agreement must be entered into between Entergy and the Customer. The key assumptions used in preparation of this preliminary scope of work and cost estimate have been identified in Section 2.

1. PROJECT SUMMARY

1.1. Customer Need and Project Background

North Little Rock Electric Department ("Customer") approached Entergy Arkansas ("Company") in January, 2024 about adding a 50 MVA transformer and associated buswork to the Faulkner Lake Substation.

1.2. Proposed Scope

The recommended action plan involves the following:

- Substation: The 115kV Faulkner Lake substation currently consists of one 66.6 MVA transformer. The substation was originally designed with a footprint to house two transformers. The action plan includes the addition of one 50 MVA transformer and associated buswork.

Project Estimate

This estimate is based on assumptions and is considered a Class 5 Estimate [-50 / +100%]. Subsequent project details obtained during project due-diligence, definition, detailed design, and material and labor procurement are not available to aid in further estimate definition.

Cost Description	Estimate
Direct Cost – Substation	$6,216,161
Overhead Costs* [22.45%]	$1,395,528
Subtotal	$7,611,689
Tax Gross Up* [12.37%]	$941,566
Total Project Cost (Class 5 Estimate)	**$8,553,255**

* Represents estimated % rate and subject to change. Actual rate is calculated during execution of the project.

1.3. Project Schedule

The schedule below depicts initial Level 2 schedule durations, based on an initial analysis of the scope. Further project definition could impact project schedule and cost.

Supply chain constraints for power transformers continue to result in extended lead times for this type of equipment. The current lead time from Entergy preferred vendors for this type of Power Transformer is up to 48 months. Competitive bidding is possible to improve lead times upon execution of a Reimbursement Agreement to cover such project activities.

Activity Description	Estimated Duration (Months)
Project Scoping and Definition	6
Engineering and Material Procurement**	48
Construction	8
Total Project Duration	56

**PROJECT SCOPING AND MATERIAL PROCUREMENT WILL OVERLAP.

2. ASSUMPTIONS & RISKS

- This estimate assumes that the Customer is responsible to reimburse the work and that the Customer will pre-pay for the work by providing Capital In Aid of Construction (CIAC). As such the estimate does not include Applicable Funds Used During Construction Costs (AFUDC), Company's estimated Capital borrowing rate.
- The Customer will be required to enter into a reimbursement agreement to further advance the project. The Customer may enter into a Facilities Study Reimbursement Agreement to provide a full project baseline including a Class 3 estimate scope. Customer may request cost and duration estimate for this study that the Company will provide. The Customer may also choose to execute a Project Reimbursement Agreement with Company to execute the proposed scope of work as captured in this document.

- The estimate is prepared in 2025 nominal dollars and does not include annual inflation or unknown material or labor escalations.
- The estimate assumes that Entergy will utilize employees, contractors, or a combination thereof to perform the required oversight and performance of engineering, procurement and construction tasks and oversight to complete the Project.
- The Project assumes that outages can be obtained on the required facilities to perform the required construction tasks associated with this project.
- The Project assumes no additional schedule duration was included to account for weather delays beyond NOAA historic averages.
- The estimate assumes that there is no value in retired equipment, and all will be disposed of without the benefit of salvage credit.
- The Project assumes that there are no underground hazards present within the construction footprint that would prevent typical construction methods for this scope of work.
- The Project assumes that there are no special environmental, regulatory, etc. permits required to perform the required construction tasks associated with this project.
- This project assumes Entergy will have unimpeded access to the required facilities to complete the Project.
- This project assumes that no special work procedures or safety requirements are required for the Project.
- This project assumes no change to the current layout of the substation will be necessary and that no additional acreage will be required.
- The Project Schedule assumes that procurement of major components, such as the transformer, will begin during project scoping.

3. ATTACHMENTS

- Attachment 1: Customer / Request Details
- Attachment 2: Current Faulkner Lake Substation Map
- Attachment 3: Preliminary Conceptual Drawing

Attachment 1: Customer Request/Details

Crystal,

We discussed this some last month but I have 3 projects that I need to investigate doing and they all involve expanding existing substations in NLR or building/improving existing Entergy Transmission Lines and Facilities to accommodate. My goal is to do at least one feasibility study with Entergy this year. If I were to upgrade Faulkner Lake from a 50 MVA to 100 MVA capacity station, I'm looking at 3+ years just waiting on a transformer to get spec'd out and ordered for that project. Meaning something I want to do in 2028 needs to be started in approved this year with you planning wise and in my city budget wise.

If it would be better to start with a quick look at our project ideas these are the top 3. They all are improvements to East part of North Little Rock which is where we expect to see growth in the next 5 to 15 years. They all hinge on the costs and timelines Entergy would have to be built. What would be the best way to pursue these?

Do you have someone that can look at these and make a quick ball park +/- 5 Million Dollar estimate and number of months to accomplish these. Or Tell me there is no way these could be done in the next 5 years? For sure I want to pursue Faulkner Lake's expansion this year but depending on the upgradability of the area around our Galloway substation, funding may be better invested in that substation or area instead.

Let me know what you think the best step would be here. I'm open to doing a full on official study on all three of these in 2024 if need be.

These Projects are:

1. Add a 50 MVA Transformer, new bus work and 5 new Distribution Circuit Breakers to Faulkner Lake Substation. Currently this station has a single 50 & MVA transformer in service now.
2. Allow Galloway to have its full 50 MVA of transformer capacity. Currently we have two 25 MVA transformers installed and in service at Galloway Substation. What transmission improvements would need to be done to remove the current 25 MVA loading limit we have placed on the substations due by Entergy's Transmission restrictions?
3. There is an empty lot just east of the Hwy 391 and Hwy 70 intersection, two properties east from the Amazon Distribution Facility served by Entergy, that has had multiple requests by developers with electric service requests from 40 MVA to 100 MVA for the property. Currently, our studies show with current loading and services available, we would only be able to serve 5 MVA to this lot without any additional upgrades. What would it take to have Entergy build lines and serve a new distribution substation that NLRED owned and operated at or near this site? See image below. Google map coordinates: 34.774340270155S, -92.134409228487

Thanks,
Eric Heinrichs, P.E.

Director of Engineering
North Little Rock Electric Department
Office: (501) 992 - [redacted]
Fax: (501) 992 - 4802
eheinrichs@northlittlerock.ar.gov

Attachment 2: Current Faulkner Lake Substation Map

Attachment 3: Preliminary Conceptual Drawing

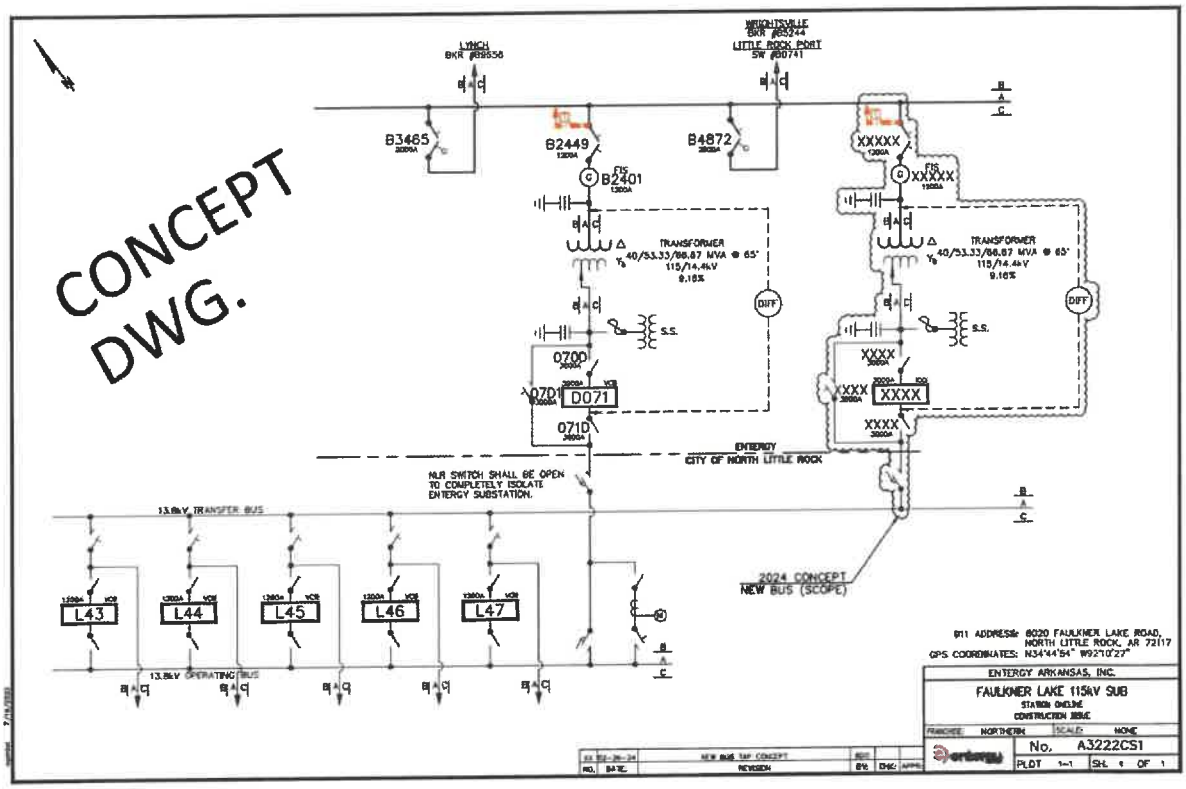

"Exhibit B"

Milestone Payments Schedule

Payment Date	Amount
Upon RA Execution (2025)	$2,750,000
01/15/26	$2,900,000
01/15/27	$2,903,255
Close out/True Up	TBD
Total	$8,553,255

**Suggested schedule is subject to change during scoping and engineering*

DOCUMENT VERSION HISTORY

Version	Date	Description	Edited By
1.0	2/27/2020	Initial template developed	JMP
2.0	3/16/2021	Minor revisions/improvements	JCJ
3.0	1/25/2024	Format revisions and updates that Facilities Study not only path to advance project	CRC