CITY OF NORTH LITTLE ROCK, ARKANSAS
COMMERCE DEPARTMENT
Mary Beth Bowman, Director
Amy Smith, Assistant Director for Procurement
Crystal Willis, Admin. Sect. /Asst. Purchasing Agent

120 MAIN STREET
P.O. BOX 5757
NORTH LITTLE ROCK, AR 72119
501-975-8881 Phone
501-975-8885 Fax

INVITATION TO BID

Bid Number : 17-3422 Date Issued: December 6, 2016

Date & Time Bid Opening: Tuesday, December 20, 2016 at 10:00 a.m.

2017 CONSTRUCTION MATERIALS FOR THE NORTH LITTLE ROCK ELECTRIC DEPARTMENT

Specifications are attached.

Any questions regarding the bid should be directed to

- Karen Allen at 501-992-4058
- Brenda Davidson at 501-992-4026

→ Quantities shown are estimates based on an average yearly usage; these may vary depending on demand.
→ Vendor is required to keep 25% in stock of the estimated quantity with a maximum of ten (10) days shipping/delivery availability.
→ Vendor must identify specific items which require more than ten (10) days delivery time.
→ Vendor is required to have a Central Arkansas warehouse location for essential items.
→ Vendor should provide all contact information for ordering purposes.
→ Deliveries for large reels of wire must be made on open bed trucks to prevent damage.
→ Vendor must note "N" means no substitution where specified; "EM" means exact match or equivalent to.

NOTE: FAILURE TO FILL OUT AND SIGN THE INVITATION TO BID SHEET WILL RESULT IN REJECTION OF THE BID.

EXECUTION OF BID

Upon signing this Bid, the bidder certifies that they have read and agree to the requirements set forth in this bid, including specifications, conditions and pertinent information regarding the articles being bid on, and agree to furnish these articles at the prices stated.

NAME OF FIRM:_____ DATE:_____

PHONE NUMBER:_____ AR TAX PERMIT NO._____

BUSINESS ADDRESS:_____

SIGNATURE OF AUTHORIZED PERSON &
TITLE:_____

UNSIGNED BIDS WILL BE REJECTED

TERMS AND STANDARD CONDITIONS
CITY OF NORTH LITTLE ROCK, ARKANSAS

PLEASE READ CAREFULLY

1. When submitting an "Invitation to Bid," the bidder warrants that the commodities covered by the bid shall be free from defects in material and workmanship under normal use and service. In addition, bidder must deliver new commodities of the latest design and model, unless otherwise specified in the "Invitation to Bid."

2. Prices quoted are to be net process, and when an error is made in extending total prices, the City may accept the bid for the lesser amount whether reflected by extension or by the correct multiple of the unit price.

3. Discounts offered will be taken when the City qualifies for such. The beginning date for computing discounts will be the date of invoice or the date of delivery and acceptance, whichever is later.

4. When bidding other than the brand and/or model specified in the "Invitation to Bid," the brand and/or model number must be stated by that item in the "Invitation to Bid," and descriptive literature be submitted with the bid.

5. The City reserves the right to reject any and all bids.

6. The Purchasing office reserves the right to award items, all or none, or by line item(s).

7. Quality, time and probability of performance may be factors in making an award.

8. Bid quotes submitted will remain firm for 30 calendar days from bid opening date; however, the prices may remain firm for a longer period of time if mutually agreeable between bidder and the Department of Commerce and Governmental Relations.

9. Bidder must submit a completed signed copy of the front page of the "Invitation to Bid" and must submit any other information required in the "Invitation to Bid."

10. In the event a contract is entered into pursuant to the "Invitation to Bid," the bidder shall not discriminate against any qualified employee or qualified applicant for employment because of race, sex, color, creed, national origin or ancestry. The bidder must include in any and all subcontracts a provision similar to the above.

11. Sales or use tax is not to be included in the bid price, but is to be added by the vendor to the invoice billing to the City. Although use tax is not to be included in this bid, vendors are to register and pay tax direct to the Arkansas State Revenue Department.

12. Prices quoted shall be "Free on Board" (F.O.B.) to destination at designated facility in North Little Rock. Charges may not be added after the bid is opened.

13. In the event of two or more identical low bids, the contract may be awarded arbitrarily or for any reason to any of such bidders or split in any proportion between them at the discretion of the Department of Commerce and Governmental Relations.

14. Specifications furnished with this Invitation are intended to establish a desired quality or performance level, or other minimum dimensions and capacities, which will provide the best product available at the lowest possible price. Other than designated brands and/or models approved as equal to designated products shall receive an equal consideration.

15. Samples of items when required, must be furnished free, and, if not called for within 30 days from date of bid opening, will become property of the City.

16. Bids will not be considered if they are: 1. Submitted after the bid's opening time. 2. Submitted electronically or faxed I (unless authorized by Purchasing Agent).

17. Guarantees and warranties should be submitted with the bid, as they may be a consideration in making an award.

18. **CONSTRUCTION**

A. Contractor is to supply the City with evidence of having and maintaining proper and complete insurance, specifically Workman's Compensation Insurance in accordance with the laws of the State of Arkansas, Public Liability and Property Damage. All premiums and cost shall be paid by the Contractor. In no way will the City be responsible in case of accident.

B. When noted, a Certified check or bid bond in the amount of 5% of total bid shall accompany bid.

C. A Performance Bond equaling the total amount of any bid exceeding $10,000.00 must be provided for any contract for the repair, alteration or erection of any public building, public structure or public improvement (pursuant to Act 351 or 1953 as amended by Act 539 of 1979).

19. **LIQUIDATED DAMAGES** - Liquidated damages shall be assessed beginning on the first day following the maximum delivery or completion time entered on this bid form and/or provided for by the plans and specifications.

20. **AMBIGUITY IN BID** - Any ambiguity in any bid as the result of omission, error, lack of clarity or non-compliance by the bidder with specifications, instructions, and all conditions of bidding shall be construed in the light most favorable to the City.

21. The bid number should be stated on the face of the sealed bid envelope. If it is not, the envelope will have to be opened to identify.

22. Whenever a bid is sought seeking a source of supply for a specified period of time for materials and services, the quantities of usage shown are estimated ONLY. No guarantee or warranty is given or implied by the participants as to the total amount that may or may not be purchased from any resulting contracts. These quantities are for the bidders information ONLY and will be used for tabulation and presentation of bid and the participant reserves the right to increase or decrease quantities as required.

23. The City of North Little Rock reserves the right to reject any and all bids, to accept in whole or in part, to waive any informalities in bids received, to accept bids on materials or equipment with variations from specifications in those cases where efficiency of operation will not be impaired, and unless otherwise specified by the bidder, to accept any item in the bid. If unit prices and extensions thereof do not coincide, the City of North Little Rock may accept the bid for the lesser amount whether reflected by the extension or by the correct multiple of the unit price.

24. Additional information or bid forms may be obtained from:
COMMERCE DEPARTMENT, 120 Main Street, P.O. Box 5757, North Little Rock, Arkansas 72119 (501) 975-8881 www.nlr.ar.gov

Bidding documents must be submitted on or before the bid's opening date and time. Unless noted, sealed bids must be submitted to the Commerce Department at 120 Main Street, North Little Rock, AR 72114 or PO Box 5757, North Little Rock, AR 72119

NLR ELECTRIC DEPARTMENT
CONSTRUCTION MATERIALS FOR 2017

SPECIFICATIONS ARE ATTACHED.

Any questions regarding the specifications and/or requirements should be directed to Karen Allen at 501-992-4058 or Brenda Davidson at 501-992-4026.

- Quantities shown are estimates based on an average yearly usage; these may vary depending on demand.
- Vendor is required to keep 25% in stock of the estimated quantity with a maximum of ten (10) days shipping / delivery availability.
- Vendor must identify specific items which require more than 10 days delivery time.
- Vendor is required to have Central Arkansas Warehouse location for essential items.
- Vendor should provide all contact information for ordering purposes.
- Deliveries for large reels of wire must be made on open bed trucks to prevent damage.
- Vendor must note "N" means no substitution where specified; "EM" means Exact match or equivalent to.

NOTE: FAILURE TO FILL OUT AND SIGN THE INVITATION TO BID SHEET WILL RESULT IN REJECTION OF THE BID.

NORTH LITTLE ROCK ELECTRIC DEPARTMENT

2017 CONSTRUCTION MATERIAL LIST

VENDOR PACKET

ITEM NO	Description	MFR	MFG NO	SUB	EST AVG QTY	UOM	NOTATIONS/COMMENTS
AA0000L	LUBRICANT (KNOCK'ER LOOSE)	CRC	03020	N	120	EACH	
AH00003	3 1/2' SQUARE EXTENSIONS	CHANCE	12655		50	EACH	
AH00005	5' SQUARE EXTENSIONS	CHANCE	12656		50	EACH	
AH00010	ANCHOR, 10" EXPANDING	CHANCE	108234		50	EACH	
AH000SS	ANCHOR, S&S 8" / 10" (WITH GUY ADAPTERS)	CHANCE	12654-3AE	N	50	EACH	
AH00348	ANCHOR ROD 3/4" x 8'	CHANCE	5358		25	EACH	
AH00586	ANCHOR ROD 5/8" x 6'	CHANCE	5346		25	EACH	
AH10HEL	ANCHOR, PISA 10"	MACLEAN	D104-6		100	EACH	
AH12HEL	ANCHOR ROD 3/4" x 7' PISA	MACLEAN	D75D		100	EACH	
AP00000	ARM PIN, STD 5/8"	CHANCE	881P		500	EACH	
AS00000	ARRESTER, 10KV DISTRIBUTION (NORMAL DUTY)	COOPER OR OHIO BRASS	UNS10050A1A1B1A / 2172597324	N	300	EACH	
BD05820	BOLT DA 5/8" x 20"	CHANCE / MACLEAN	8870 / J8870		250	EACH	
BD05822	BOLT DA 5/8" x 22"	CHANCE / MACLEAN	8872 / J8872		250	EACH	
BE00058	BOLT EYELET 5/8"	CHANCE / LINE HARDWARE	B14A / BEL-58		600	EACH	
BH00012	1/2" BRASS HEX NUT				1000	EACH	
BH00122	1/2" x 2" BRASS HEX BOLT *(ALL THREAD)*				2000	EACH	
BH012LW	1/2" BRASS LOCK WASHERS				1000	EACH	
BH12000	1/2" BRASS FLAT WASHERS				1000	EACH	
BH12212	1/2" x 2 1/2" BRASS HEX BOLT *(ALL THREAD)*				650	EACH	
BM00126	BOLT, MA 1/2" x 6"				500	EACH	
BM05812	BOLT, MA 5/8" x 12"	CHANCE	8812		2000	EACH	
BM05814	BOLT, MA 5/8" x 14"	CHANCE	8814		600	EACH	
BR00001	BRACKET 1 SPOOL	CHANCE	0338		1000	EACH	
BR0000P	BRACKET, ARRESTER POLE MNTG	MACLEAN	F102382 / J24518	N	750	EACH	
CA00336	336-336 CONNECTOR	BURNDY	WCY56 OR WCY56PB		30	EACH	

ITEM NO	Description	MFR	MFG NO	SUB	EST AVG QTY	UOM	NOTATIONS/COMMENTS
CA00795	795-795 AAC CONNECTOR	BURNDY	WCY72 or WCY72PB		30	EACH	
CC00009	COMPRESSION CONNECTOR, WR9	BLACKBURN	WR9		2000	EACH	
CC00139	COMPRESSION CONNECTOR, WR139	BLACKBURN	WR139		500	EACH	
CC00159	COMPRESSION CONNECTOR, WR159	BLACKBURN	WR159		1500	EACH	
CC00189	COMPRESSION CONNECTOR, WR189	BLACKBURN	WR189		1000	EACH	
CC00279	COMPRESSION CONNECTOR, WR279	BLACKBURN	WR279		500	EACH	
CC00289	COMPRESSION CONNECTOR, WR289	BLACKBURN	WR289		1000	EACH	
CC00389	COMPRESSION CONNECTOR, WR389	BLACKBURN	WR389		500	EACH	
CL1520A	CLAMP, SMALL HOT LINE	HPS ANDERSON/BLACKBURN	S1520AGP /HLC2108AP9		600	EACH	
CM00004	CONNECTOR, SPLIT-BOLT #4 CU	BLACKBURN / BURNDY	4H3 / KS203		600	EACH	
CM00006	CONNECTOR, SPLIT-BOLT #6 CU	BLACKBURN / BURNDY	6H3 / KS173		500	EACH	
CM00010	CONNECTOR, SPLIT-BOLT 1/0 CU	BLACKBURN / BURNDY	10H / KS25		100	EACH	
CM00020	CONNECTOR, SPLIT-BOLT 2/0 CU	BLACKBURN / BURNDY	20H / KS26		100	EACH	
CM0002S	CONNECTOR, SPLIT-BOLT #2 STR CU	BLACKBURN / BURNDY	1H / KS23		600	EACH	
CM00040	CONNECTOR, SPLIT-BOLT 4/0 CU	BLACKBURN / BURNDY	40H / KS29		100	EACH	
CM00500	CONNECTOR, 2 BOLT ALL PURPOSE	BLACKBURN / BURNDY	2B500PW / KVSU34		100	EACH	
CM01000	CONNECOTR, 2 BOLT ALL PURPOSE	BLACKBURN / BURNDY	2B1000PW / KVSU44		50	EACH	
CR00001	CROSSARM BRACE (REVERSIBLE-UNDEARM STYLE)	ALUMA FORM	RA6018		600	EACH	
CR0008S	CROSSARM, 8' STD 3 5/8" x 4 5/8"		BXARM8FC-25BDL		300	EACH	
CR000P1	CROSSARM, DEAD-END FIBERGLASS (SGL)	PUPI	DA2500-96E3-B73	N	30	EACH	
CR000P2	CROSSARM, DEAD-END FIBERGLASS (DBL)	PUPI	DA3000-96E3-B73	N	30	EACH	
CR000SA	STAND OFF BRACKET SINGLE POSITION (3-PHASE)	ALUMA FORM	F3CA-MV-H4818-S1-H		100	EACH	
CR000SA1	STAND OFF BRACKET SINGLE POSITION (1PHASE)	ALUMA FORM	F1CA-MV-H18-S1-H		100	EACH	
CR000SAB	STAND OFF BRACKET-SPACER BAR (WITH HARDWARE)	ALUMA FORM	S1-BAR-T8-H		100	EACH	
DB00336	DEAD-END AL BOLTED 4/0-336 ACSR SPRING LOADED	ANDERSON	ADEZ88N		100	EACH	

ITEM NO	Description	MFR	MFG NO	SUB	EST AVG QTY	UOM	NOTATIONS/COMMENTS
DB00620	DEAD-END AL BOLTED 6-2/0 ACSR SPRING LOADED	ANDERSON	ASOD3981N		500	EACH	
DB00795S	DEAD-END BOLTED AL PRI 795 -SPRING LOADED	ANDERSON/MACLEAN	ADEZ116N / HDS0116		150	EACH	
DH00000	DRIVE HOOKS (J HOOK)	CHANCE / MACLEAN	C205-0190 / J3316P		200	EACH	
DS00002	DEAD-END SERVICE GRIP #2	PREFORMED	SG-4504		600	EACH	
DS00004	DEAD-END SERVICE GRIP #4	PREFORMED	SG-4502		500	EACH	
DS00006	DEAD-END SERVICE GRIP #6	PREFORMED	SG-4500		200	EACH	
DS00010	DEAD-END SERVICE GRIP 1/0	PREFORMED	SG-4506		200	EACH	
DW02040	DEAD-END SERVICE WEDGE 2/0-4/0 ACSR	BLACKBURN	W40-1FC		100	EACH	
EN00058	EYE NUT 5/8", OVAL	LINE HARDWARE	OEN-58		500	EACH	
FIOH000	FAULT INDICATOR, OVERHEAD	See attached specifications		N	30	EACH	
FIUG000	FAULT INDICATOR, UNDERGROUND	See attached specifications		N	30	EACH	
FL00KS5	FUSE LINKS KS 5 AMP	KEARNEY	21005	N	500	EACH	
FL00KS7	FUSE LINKS KS 7 AMP	KEARNEY	21007	N	200	EACH	
FL0KS10	FUSE LINKS KS 10 AMP	KEARNEY	21010	N	500	EACH	
FL0KS30	FUSE LINKS KS 30 AMP	KEARNEY	21030	N	250	EACH	
FL0KS65	FUSE LINKS KS 65 AMP	KEARNEY	21065	N	250	EACH	
GC00058	GROUND CLAMP 5/8"	BLACKBURN	G5		1000	EACH	
GD00588	GROUND ROD 8'				500	EACH	
GG0010M	10M GUY GRIP	PREFORMED	AWDE-4116	EM	750	EACH	
GG0020M	20M GUY GRIP	PREFORMED	AWDE-4126	EM	250	EACH	
GI00012	GUY INSULATOR ROD 12'	MACLEAN	GCC15144R		30	EACH	
GI00078	GUY INSULATOR ROD 78"	MACLEAN	GCC1578R		200	EACH	
GI0020M	GUY INSULATOR ROD - 20M	MACLEAN	GCC3096R		30	EACH	
GP00000	GUY GUARD - YELLOW	PREFORMED	PG-5518		500	EACH	
GR0010M	10M GUY WIRE				10000	FEET	

VENDOR: _____

DATE: _____

ITEM NO	Description	MFR	MFG NO	SUB	EST AVG QTY	UOM	NOTATIONS/COMMENTS
GR0020M	20M GUY WIRE				1000	FEET	
GS0000C	SIDEWALK GUY CLAMP END FITTING	CHANCE	0502		25	EACH	
GS0000P	SIDEWALK GUY POLE PLATE	CHANCE	0501		25	EACH	
GT00058	GUT ATTACHMENT 5/8" (POLE EYE PLATE)	CHANCE	GEP5 / GEP5A	N	500	EACH	
GW00058	GUY WASHER 5/8"	MACLEAN	J113		500	EACH	
IN0000P	INSULATOR, PIN (F-NECK)	PORCELAIN PRODUCTS / VICTOR INSULATORS	366S / VI 606R		2000	EACH	
IN0000S	INSULATOR, 3" SPOOL	PORCELAIN PRODUCTS / VICTOR INSULATORS	5101 / VI 2612		1000	EACH	
IN000PO	INSULATOR, 15KV POLYMER	OHIO BRASS	4010150215	N	675	EACH	
IS00022	INSULINK 2-2	BLACKBURN	ICS73-1		1000	EACH	
IS00024	INSULINK 2-4	BLACKBURN	ICS72-1		1000	EACH	
IS00026	INSULINK 2-6	BLACKBURN	ICS71-1		500	EACH	
IS00044	INSULINK 4-4	BLACKBURN	ICS68-1		600	EACH	
IS00046	INSULINK 4-6	BLACKBURN	ICS67-1		300	EACH	
IS00066	INSULINK 6-6	BLACKBURN	ICS64-1		300	EACH	
IS00102	INSULINK 1/0 - 2	BLACKBURN	ICS77-1		500	EACH	
IS01010	INSULINK 1/0 - 1/0	BLACKBURN	ICS78-1		500	EACH	
LU02600	LUG, 4 HOLE 4C 2-600	BLACKBURN	ADR60-44D	EM	300	EACH	
LU06350	LUG, 2 HOLE 2C 6 350	BURNDY	KK2A36U-2N		30	EACH	
LU06400	LUG, 6 HOLE 4C LAY-IN CONNECTOR	CMC/ESP UTILITY PRODUCTS	DLI600-4	N	500	EACH	
PC00000	POLE CRETE STABLIZER	POLY-SET	PS210		120	EACH	
PO00018	POLE TOP PIN 18"	CHANCE	2170		150	EACH	
PV00002	WIRE PULLING LUBRICANT	THOMAS & BETTS	PJ-128	N	120	EACH	
PV00003	CABLE CLEANER & DEGREASER	CRC	02040	N	120	CAN	
PV00005	PVC GLUE (IN 1 QUART CANS)	CANTEX / CARLON	PVC No. 99 (7210603) / VC9982	N	120	CAN	
PV20000	2" PVC SCHEDULE 40 CONDUIT *(20' Length)*	CARLON	49011-20		28000	FEET	

ITEM NO	Description	MFR	MFG NO	SUB	EST AVG QTY	UOM	NOTATIONS/COMMENTS
PV20001	2" PVC SCHEDULE 40 COUPLING	CARLON	E940J		100	EACH	
PV20001L	2" PVC SCHEDULE 40 COUPLING - LONG LINE	CARLON	E941J		500	EACH	
PV20002	2" PVC SCHEDULE 40 LONG 90° ELBOW *(36" Radius)*	CARLON	UA9FJ		150	EACH	
PV20003	2" PVC SCHEDULE 40 SHORT 90° ELBOW				75	EACH	
PV30000	3" PVC SCHEDULE 40 CONDUIT *(10' Length)*	CARLON	49013-10		3000	FEET	
PV30001	3" PVC SCHEDULE 40 COUPLING		E940L		50	EACH	
PV30001L	3" PVC SCHEDULE 40 COUPLING - LONG LINE	CARLON	E941L		100	EACH	
PV30002	3" PVC SCHEDULE 40 LONG 90° ELBOW *(36" Radius)*	CARLON	UA9FL		30	EACH	
PV30003	3" PVC SCHEDULE 40 SHORT 90° ELBOW				20	EACH	
PV40000	4" PVC SCHEDULE 40 CONDUIT *(10' Length)*	CARLON	49015-10		5000	FEET	
PV40001	4" PVC SCHEDULE 40 COUPLING				50	EACH	
PV40001L	4" PVC SCHEDULE 40 COUPLING - LONG LINE	CARLON	E941N		100	EACH	
PV40002	4" PVC SCHEDULE 40 LONG 90° ELBOW *(36" Radius)*	CARLON	UA9FN		30	EACH	
PV40003	4" PVC SCHEDULE 40 SHORT 90° ELBOW				20	EACH	
SAA0010	SPLICE AL AUTO 1/0 ACSR	FARGO	GL-406-A		100	EACH	
SAA0024	SPLICE AL AUTO 2 - 4 ACSR	FARGO	GL-4042A		100	EACH	
SAA0040	SPLICE AL AUTO 4/0 ACSR	FARGO	GL-409A		100	EACH	
SAA0336	SPLICE AL AUTO 336 ACSR	FARGO	GL-411		100	EACH	
SAA0795	SPLICE AL AUTO 795 AAC	FARGO	GL1385A+		30	EACH	
SAA0795A	SPLICE AL AUTO 795 ASCR	FARGO	GL1385A+		30	EACH	
SAN0002	SPLICE AL COMP SVC NEUT #2	BLACKBURN	TR64		500	EACH	
SAN0004	SPLICE AL COMP SVC NEUT #4	BLACKBURN	TR63		300	EACH	
SAN0006	SPLICE AL COMP SVC NEUT #6	BLACKBURN	TR61		300	EACH	
SAN0010	SPLICE AL COMP SVC NEUT 1/0	BURNDY	YSC25R		200	EACH	
SAN0040	SPLICE AL COMP SVC NEUT 4/0	BURNDY	YSD28R28R		100	EACH	

ITEM NO	Description	MFR	MFG NO	SUB	EST AVG QTY	UOM	NOTATIONS/COMMENTS
SC00000	SCREW, LAG	CHANCE	508754		1000	EACH	
SCA02SO	SPLICE CU AUTO #2 SOL	FARGO	GL-114		100	EACH	
SCA02ST	SPLICE CU AUTO #2 STR	FARGO	GL-115		100	EACH	
SCA04SO	SPLICE CU AUTO #4 SOL	FARGO	GL-112		100	EACH	
SCA06SO	SPLICE CU AUTO #6 SOL	FARGO	GL-111		100	EACH	
SR00000	STIRRUP , BAIL	BURNDY	J990		300	EACH	
SR000SM	STIRRUP, SMALL	ANDERSON	AHLS022019E		100	EACH	
SR00336	STIRRUP, 336	ANDERSON	AHLS397021E		100	EACH	
SR00795	STIRRUP, 795	ANDERSON	AHLS954022E		100	EACH	
SR00SMB	STIRRUP, BRONZE	ANDERSON	BHLS022016E		100	EACH	
SW0000C	SWITCH, COMBINATION	CHANCE	C71DM112PB	N	100	EACH	
SW00100	SWITCH, CUTOUT 100AMP	CHANCE	C710112PB	N	400	EACH	
SW00200	SWITCH, CUTOUT 200AMP	CHANCE	C710143PB	N	30	EACH	
SW900AB	SWITCH, 900AMP GOAB	BRIDGES	1272X41A	N	10	EACH	
TC0000L	X-CLUSTER MOUNT - LARGE	ALUMA FORM	15M3-6		30	EACH	
TG000BC	BUSHING COVER	SALISBURY	21116		480	EACH	
TL00000	X TANK GROUND LUGS	ANDERSON	GTCS21		500	EACH	
TT00033	TAPE, SUPER 33+	3M SCOTCH	054007-06132		2000	ROLL	
UA0000B	ARRESTER, BUSHING	ELASTIMOLD	167BSA1010BX		30	EACH	
UA0000D	ARRESTER, DIP-POLE/RISER (HEAVY DUTY)	COOPER OR OHIO BRASS	URS10050A1A1A / 2216097324	N	300	EACH	
UA0000E	ARRESTER, ELBOW	ELASTIMOLD	167ESA1010BX	N	30	EACH	
UA0000P	ARRESTER, PARKING	ELASTIMOLD	167PSA101BX	N	30	EACH	
UB0000I	BUSHING INSERT (BUSHING WELL INSERT)	COOPER	LBI-215		30	EACH	
UB0000P	BUSHING, INSULATED PARKING (STAND OFF PLUG)	ELASTIMOLD	161SOPBG	N	30	EACH	
UC0000S	CLUSTER EQUIPMENT MOUNT SWITCH	ALUMA FORM	R3CA		20	EACH	

ITEM NO	Description	MFR	MFG NO	SUB	EST AVG QTY	UOM	NOTATIONS/COMMENTS
UC0000T	CLUSTER EQUIPMENT MOUNT TERMINATER	ALUMA FORM	TBEMB16PA35		20	EACH	
UE00001	ENCLOSURE, FEED-THRU 1 PHASE	See attached specifications		P	30	EACH	
UE00003	ENCLOSURE, FEED-THRU 3 PHASE	See attached specifications		P	30	EACH	
UE0000C	ENCLOSURE SLEEVE (FIBERCRETE)	CONCAST	FC-40-43-15	N	30	EACH	
UE000S1	ENCLOSURE FEED-THRU GROUND SLEEVE 1 PHASE	See attached specifications		P	30	EACH	
UE000S3	ENCLOSURE FEED-THRU GROUND SLEEVE 3 PHASE	See attached specifications		P	30	EACH	
UF0000H	FEED-THRU HORIZONTAL PARKING	COOPER	RTE 2637168CO1M		20	EACH	
UI0000C	INSULATED CAP	COOPER	LPC215		90	EACH	
UJ00002	JUNCTION, 2 WAY LOADBREAK W/ "U" STRAPS	COOPER / ELASTIMOLD	LJ215C2U / 164J2-5		30	EACH	
UJ00003	JUNCTION, 3 WAY LOADBREAK W/ "U" STRAPS	COOPER / ELASTIMOLD	LJ215C3U / 164J3-5		30	EACH	
UJ00004	JUNCTION, 4 WAY LOADBREAK W/ "U" STRAPS	COOPER	LJ215C4U / 164J4-5		10	EACH	
UJ0000P	JUNCTION, PEDESTAL SEC 14" ABOVE GRD	PENCELL	AG-15HDX-L35-EWB	N	60	EACH	
UJ000ST	JUNCTION BOX, SEC STD 20" GRD LEVEL - GREEN	PENCELL	PE20HDX	N	30	EACH	
UL010ST	LOAD BREAK ELBOW 1/0 STR (W - TEST POINT)	COOPER / ELASTIMOLD	LE215C06T / 166LR-C-5240	N	500	EACH	
UT00003	TERMINATOR MOUNTING BRACKET 1/0 STR	3M	MB-3	N	120	EACH	
UT00S10	TERMINATOR STEM 1/0 STR ONLY	3M	SC00010	N	120	EACH	
UT010ST	TERMINATOR 1/0 STR	3M	5641	N	120	EACH	
WAP0002	WIRE, PRIMARY #2 ACSR	SPARROW			2000	POUND	
WAP0010	WIRE, PRIMARY 1/0 ACSR	RAVEN			1000	POUND	
WAP0336	WIRE, PRIMARY 336.4 ACSR	MERLIN			10000	FEET	
WAS002T	WIRE, SECONDARY #2 TRIPLEX	CONCH			20000	FEET	
WAS004D	WIRE, SECONDARY #4 DUPLEX	TERRIER			10000	FEET	
WAS004T	WIRE, SECONDARY #4 TRIPLEX	PERIWINKLE			5000	FEET	
WAS006D	WIRE, SECONDARY #6 DUPLEX	SHEPARD			10000	FEET	
WAS006T	WIRE, SECONDARY #6 TRIPLEX	HIPPA			1000	FEET	

ITEM NO	Description	MFR	MFG NO	SUB	EST AVG QTY	UOM	NOTATIONS/COMMENTS
WAS010T	WIRE, SECONDARY 1/0 TRIPLEX	NERITINA			10000	FEET	
WAS040Q	WIRE, SECONDARY 4/0 QUADREPLEX	APPALOOSA			1000	FEET	
WAU004D	WIRE, UG SECONDARY #4 DUPLEX	DELGADO			2000	FEET	
WAU004T	WIRE, UG SECONDARY #4 TRIPLEX	VASSAR			1000	FEET	
WAU010T	WIRE, UG SECONDARY 1/0 TRIPLEX	BRENAU			10000	FEET	
WAU030T	WIRE, UG SECONDARY 3/0 TRIPLEX	HOLLINS			12000	FEET	
WAU040T	WIRE, UG SECONDARY 4/0 TRIPLEX	SWEETBRIAR			2000	FEET	
WAU350T	WIRE, UG SECONDARY 350 TRIPLEX	WESLEYAN			6000	FEET	
WCB0002	WIRE, BARE COPPER #2				12500	FEET	
WCB004S	WIRE, BARE COPPER #4 SOFT DRAWN				30000	FEET	
WCB006S	WIRE, BARE COPPER #6 SOFT DRAWN				30000		
WCI0020	WIRE, INSULATED CU 2/0				3000	FEET	
WCI0040	WIRE, INSULATED CU 4/0				1000	FEET	
WCI101B	WIRE, INSULATED CU THHN #10 SOL - BLACK				10000	FEET	
WCI010W	WIRE, INSULATED CU THHN #10 SOL - WHITE				5000	FEET	
WO00012	WASHER, ROUND 1/2"				1000	EACH	
WO00058	WASHER, SPRING 5/8"	CHANCE	C2050186		3000	EACH	
WO0058S	WASHER, SQUARE 5/8"	CHANCE	6813		3000	EACH	
ZA02524	TRANSFORMER, 25KVA 7620 120-240, TAP CONV 2 BUSHING	***See specifications attached***			100	EACH	
ZA05024 (*)	TRANSFORMER, 50KVA 7620 120-240, TAP CONV 2 BUSHING (SEE NLRED DIMENSION REQUIREMENTS)	***See detailed dimensions below - specifications attached***			120	EACH	
ZA07524	TRANSFORMER, 75KVA 7620 120-240, TAP CONV 2 BUSHING	***See specifications attached***			10	EACH	

NORTH LITTLE ROCK ELECTRIC DEPARTMENT

2017 CONSTRUCTION MATERIAL LIST

VENDOR REFERENCE GUIDE

ITEM NO	Description	MFR	MFG NO	SUB
AA0000L	LUBRICANT (KNOCK'ER LOOSE)	CRC	03020	N
AH00003	3 1/2' SQUARE EXTENSIONS	CHANCE	12655	
AH00005	5' SQUARE EXTENSIONS	CHANCE	12656	
AH00010	ANCHOR, 10" EXPANDING	CHANCE	108234	
AH000SS	ANCHOR, S&S 8" / 10" (WITH GUY ADAPTERS)	CHANCE	12654-3AE	N
AH00348	ANCHOR ROD 3/4" x 8'	CHANCE	5358	
AH00586	ANCHOR ROD 5/8" x 6'	CHANCE	5346	
AH10HEL	ANCHOR, PISA 10"	MACLEAN	D104-6	
AH12HEL	ANCHOR ROD 3/4" x 7' PISA	MACLEAN	D75D	
AP00000	ARM PIN, STD 5/8"	CHANCE	881P	
AS00000	ARRESTER, 10KV DISTRIBUTION (NORMAL DUTY)	COOPER OR OHIO BRASS	UNS10050A1A1B1A / 2172597324	N
BD05820	BOLT DA 5/8" x 20"	CHANCE / MACLEAN	8870 / J8870	
BD05822	BOLT DA 5/8" x 22"	CHANCE / MACLEAN	8872 / J8872	
BE00058	BOLT EYELET 5/8"	CHANCE / LINE HARDWARE	B14A / BEL-58	
BH00012	1/2" BRASS HEX NUT			
BH00122	1/2" x 2" BRASS HEX BOLT *(ALL THREAD)*			
BH012LW	1/2" BRASS LOCK WASHERS			
BH12000	1/2" BRASS FLAT WASHERS			
BH12212	1/2" x 2 1/2" BRASS HEX BOLT *(ALL THREAD)*			
BM00126	BOLT, MA 1/2" x 6"			
BM05812	BOLT, MA 5/8" x 12"	CHANCE	8812	
BM05814	BOLT, MA 5/8" x 14"	CHANCE	8814	
BR00001	BRACKET 1 SPOOL	CHANCE	0338	
BR0000P	BRACKET, ARRESTER POLE MNTG	MACLEAN	F102382 / J24518	N
CA00336	336-336 CONNECTOR	BURNDY	WCY56 OR WCY56PB	
CA00795	795-795 AAC CONNECTOR	BURNDY	WCY72 or WCY72PB	
CC00009	COMPRESSION CONNECTOR, WR9	BLACKBURN	WR9	
CC00139	COMPRESSION CONNECTOR, WR139	BLACKBURN	WR139	
CC00159	COMPRESSION CONNECTOR, WR159	BLACKBURN	WR159	
CC00189	COMPRESSION CONNECTOR, WR189	BLACKBURN	WR189	
CC00279	COMPRESSION CONNECTOR, WR279	BLACKBURN	WR279	
CC00289	COMPRESSION CONNECTOR, WR289	BLACKBURN	WR289	
CC00389	COMPRESSION CONNECTOR, WR389	BLACKBURN	WR389	
CL1520A	CLAMP, SMALL HOT LINE	HPS ANDERSON/BLACKBURN	S1520AGP /HLC2108AP9	
CM00004	CONNECTOR, SPLIT-BOLT #4 CU	BLACKBURN / BURNDY	4H3 / KS203	
CM00006	CONNECTOR, SPLIT-BOLT #6 CU	BLACKBURN / BURNDY	6H3 / KS173	
CM00010	CONNECTOR, SPLIT-BOLT 1/0 CU	BLACKBURN / BURNDY	10H / KS25	
CM00020	CONNECTOR, SPLIT-BOLT 2/0 CU	BLACKBURN / BURNDY	20H / KS26	
CM0002S	CONNECTOR, SPLIT-BOLT #2 STR CU	BLACKBURN / BURNDY	1H / KS23	
CM00040	CONNECTOR, SPLIT-BOLT 4/0 CU	BLACKBURN / BURNDY	40H / KS29	
CM00500	CONNECTOR, 2 BOLT ALL PURPOSE	BLACKBURN / BURNDY	2B500PW / KVSU34	
CM01000	CONNECOTR, 2 BOLT ALL PURPOSE	BLACKBURN / BURNDY	2B1000PW / KVSU44	
CR00001	CROSSARM BRACE (REVERSIBLE-UNDEARM STYLE)	ALUMA FORM	RA6018	
CR0008S	CROSSARM, 8' STD 3 5/8" x 4 5/8"		BXARM8FC-25BDL	
CR000P1	CROSSARM, DEAD-END FIBERGLASS (SGL)	PUPI	DA2500-96E3-B73	N
CR000P2	CROSSARM, DEAD-END FIBERGLASS (DBL)	PUPI	DA3000-96E3-B73	N
CR000SA	STAND OFF BRACKET SINGLE POSITION (3-PHASE)	ALUMA FORM	F3CA-MV-H4818-S1-H	
CR000SA1	STAND OFF BRACKET SINGLE POSITION (1PHASE)	ALUMA FORM	F1CA-MV-H18-S1-H	

ITEM NO	Description	MFR	MFG NO	SUB
CR000SAB	STAND OFF BRACKET-SPACER BAR (WITH HARDWARE)	ALUMA FORM	S1-BAR-T8-H	
DB00336	DEAD-END AL BOLTED 4/0-336 ACSR SPRING LOADED	ANDERSON	ADEZ88N	
DB00620	DEAD-END AL BOLTED 6-2/0 ACSR SPRING LOADED	ANDERSON	ASOD3981N	
DB00795S	DEAD-END BOLTED AL PRI 795 -SPRING LOADED	ANDERSON/MACLEAN	ADEZ116N / HDS0116	
DH00000	DRIVE HOOKS (J HOOK)	CHANCE / MACLEAN	C205-0190 / J3316P	
DS00002	DEAD-END SERVICE GRIP #2	PREFORMED	SG-4504	
DS00004	DEAD-END SERVICE GRIP #4	PREFORMED	SG-4502	
DS00006	DEAD-END SERVICE GRIP #6	PREFORMED	SG-4500	
DS00010	DEAD-END SERVICE GRIP 1/0	PREFORMED	SG-4506	
DW02040	DEAD-END SERVICE WEDGE 2/0-4/0 ACSR	BLACKBURN	W40-1FC	
EN00058	EYE NUT 5/8", OVAL	LINE HARDWARE	OEN-58	
FIOH000	FAULT INDICATOR, OVERHEAD	See attached specifications		N
FIUG000	FAULT INDICATOR, UNDERGROUND	See attached specifications		N
FL00KS5	FUSE LINKS KS 5 AMP	KEARNEY	21005	N
FL00KS7	FUSE LINKS KS 7 AMP	KEARNEY	21007	N
FL0KS10	FUSE LINKS KS 10 AMP	KEARNEY	21010	N
FL0KS30	FUSE LINKS KS 30 AMP	KEARNEY	21030	N
FL0KS65	FUSE LINKS KS 65 AMP	KEARNEY	21065	N
GC00058	GROUND CLAMP 5/8"	BLACKBURN	G5	
GD00588	GROUND ROD 8'			
GG0010M	10M GUY GRIP	PREFORMED	AWDE-4116	EM
GG0020M	20M GUY GRIP	PREFORMED	AWDE-4126	EM
GI00012	GUY INSULATOR ROD 12'	MACLEAN	GCC15144R	
GI00078	GUY INSULATOR ROD 78"	MACLEAN	GCC1578R	
GI0020M	GUY INSULATOR ROD - 20M	MACLEAN	GCC3096R	
GP00000	GUY GUARD - YELLOW	PREFORMED	PG-5518	
GR0010M	10M GUY WIRE			
GR0020M	20M GUY WIRE			
GS0000C	SIDEWALK GUY CLAMP END FITTING	CHANCE	0502	
GS0000P	SIDEWALK GUY POLE PLATE	CHANCE	0501	
GT00058	GUT ATTACHMENT 5/8" (POLE EYE PLATE)	CHANCE	GEP5 / GEP5A	N
GW00058	GUY WASHER 5/8"	MACLEAN	J113	
IN0000P	INSULATOR, PIN (F-NECK)	PORCELAIN PRODUCTS / VICTOR INSULATORS	366S / VI 606R	
IN0000S	INSULATOR, 3" SPOOL	PORCELAIN PRODUCTS / VICTOR INSULATORS	5101 / VI 2612	
IN000PO	INSULATOR, 15KV POLYMER	OHIO BRASS	4010150215	N
IS00022	INSULINK 2-2	BLACKBURN	ICS73-1	
IS00024	INSULINK 2-4	BLACKBURN	ICS72-1	
IS00026	INSULINK 2-6	BLACKBURN	ICS71-1	
IS00044	INSULINK 4-4	BLACKBURN	ICS68-1	
IS00046	INSULINK 4-6	BLACKBURN	ICS67-1	
IS00066	INSULINK 6-6	BLACKBURN	ICS64-1	
IS00102	INSULINK 1/0 - 2	BLACKBURN	ICS77-1	
IS01010	INSULINK 1/0 - 1/0	BLACKBURN	ICS78-1	
LU02600	LUG, 4 HOLE 4C 2-600	BLACKBURN	ADR60-44D	EM
LU06350	LUG, 2 HOLE 2C 6 350	BURNDY	KK2A36U-2N	
LU06400	LUG, 6 HOLE 4C LAY-IN CONNECTOR	CMC/ESP UTILITY PRODUCTS	DLI600-4	N

ITEM NO	Description	MFR	MFG NO	SUB
PC00000	POLE CRETE STABLIZER	POLY-SET	PS210	
PO00018	POLE TOP PIN 18"	CHANCE	2170	
PV00002	WIRE PULLING LUBRICANT	THOMAS & BETTS	PJ-128	N
PV00003	CABLE CLEANER & DEGREASER	CRC	02040	N
PV00005	PVC GLUE (IN 1 QUART CANS)	CANTEX / CARLON	PVC No. 99 (7210603) / VC9982	N
PV20000	2" PVC SCHEDULE 40 CONDUIT *(20' Length)*	CARLON	49011-20	
PV20001	2" PVC SCHEDULE 40 COUPLING	CARLON	E940J	
PV20001L	2" PVC SCHEDULE 40 COUPLING - LONG LINE	CARLON	E941J	
PV20002	2" PVC SCHEDULE 40 LONG 90° ELBOW *(36" Radius)*	CARLON	UA9FJ	
PV20003	2" PVC SCHEDULE 40 SHORT 90° ELBOW			
PV30000	3" PVC SCHEDULE 40 CONDUIT *(10' Length)*	CARLON	49013-10	
PV30001	3" PVC SCHEDULE 40 COUPLING		E940L	
PV30001L	3" PVC SCHEDULE 40 COUPLING - LONG LINE	CARLON	E941L	
PV30002	3" PVC SCHEDULE 40 LONG 90° ELBOW *(36" Radius)*	CARLON	UA9FL	
PV30003	3" PVC SCHEDULE 40 SHORT 90° ELBOW			
PV40000	4" PVC SCHEDULE 40 CONDUIT *(10' Length)*	CARLON	49015-10	
PV40001	4" PVC SCHEDULE 40 COUPLING			
PV40001L	4" PVC SCHEDULE 40 COUPLING - LONG LINE	CARLON	E941N	
PV40002	4" PVC SCHEDULE 40 LONG 90° ELBOW *(36" Radius)*	CARLON	UA9FN	
PV40003	4" PVC SCHEDULE 40 SHORT 90° ELBOW			
SAA0010	SPLICE AL AUTO 1/0 ACSR	FARGO	GL-406-A	
SAA0024	SPLICE AL AUTO 2 - 4 ACSR	FARGO	GL-4042A	
SAA0040	SPLICE AL AUTO 4/0 ACSR	FARGO	GL-409A	
SAA0336	SPLICE AL AUTO 336 ACSR	FARGO	GL-411	
SAA0795	SPLICE AL AUTO 795 AAC	FARGO	GL1385A+	
SAA0795A	SPLICE AL AUTO 795 ASCR	FARGO	GL1385A+	
SAN0002	SPLICE AL COMP SVC NEUT #2	BLACKBURN	TR64	
SAN0004	SPLICE AL COMP SVC NEUT #4	BLACKBURN	TR63	
SAN0006	SPLICE AL COMP SVC NEUT #6	BLACKBURN	TR61	
SAN0010	SPLICE AL COMP SVC NEUT 1/0	BURNDY	YSC25R	
SAN0040	SPLICE AL COMP SVC NEUT 4/0	BURNDY	YSD28R28R	
SC00000	SCREW, LAG	CHANCE	508754	
SCA02SO	SPLICE CU AUTO #2 SOL	FARGO	GL-114	
SCA02ST	SPLICE CU AUTO #2 STR	FARGO	GL-115	
SCA04SO	SPLICE CU AUTO #4 SOL	FARGO	GL-112	
SCA06SO	SPLICE CU AUTO #6 SOL	FARGO	GL-111	
SR00000	STIRRUP , BAIL	BURNDY	J990	
SR000SM	STIRRUP, SMALL	ANDERSON	AHLS022019E	
SR00336	STIRRUP, 336	ANDERSON	AHLS397021E	
SR00795	STIRRUP, 795	ANDERSON	AHLS954022E	
SR00SMB	STIRRUP, BRONZE	ANDERSON	BHLS022016E	
SW0000C	SWITCH, COMBINATION	CHANCE	C71DM112PB	N
SW00100	SWITCH, CUTOUT 100AMP	CHANCE	C710112PB	N
SW00200	SWITCH, CUTOUT 200AMP	CHANCE	C710143PB	N
SW900AB	SWITCH, 900AMP GOAB	BRIDGES	1272X41A	N
TC0000L	X-CLUSTER MOUNT - LARGE	ALUMA FORM	15M3-6	
TG000BC	BUSHING COVER	SALISBURY	21116	
TL00000	X TANK GROUND LUGS	ANDERSON	GTCS21	

ITEM NO	Description	MFR	MFG NO	SUB
TT00033	TAPE, SUPER 33+	3M SCOTCH	054007-06132	
UA0000B	ARRESTER, BUSHING	ELASTIMOLD	167BSA1010BX	
UA0000D	ARRESTER, DIP-POLE/RISER (HEAVY DUTY)	COOPER OR OHIO BRASS	URS10050A1A1A / 2216097324	N
UA0000E	ARRESTER, ELBOW	ELASTIMOLD	167ESA1010BX	N
UA0000P	ARRESTER, PARKING	ELASTIMOLD	167PSA101BX	N
UB0000I	BUSHING INSERT (BUSHING WELL INSERT)	COOPER	LBI-215	
UB0000P	BUSHING, INSULATED PARKING (STAND OFF PLUG)	ELASTIMOLD	161SOPBG	N
UC0000S	CLUSTER EQUIPMENT MOUNT SWITCH	ALUMA FORM	R3CA	
UC0000T	CLUSTER EQUIPMENT MOUNT TERMINATER	ALUMA FORM	TBEMB16PA35	
UE00001	ENCLOSURE, FEED-THRU 1 PHASE	**See attached specifications**		P
UE00003	ENCLOSURE, FEED-THRU 3 PHASE	**See attached specifications**		P
UE0000C	ENCLOSURE SLEEVE (FIBERCRETE)	CONCAST	FC-40-43-15	N
UE000S1	ENCLOSURE FEED-THRU GROUND SLEEVE 1 PHASE	**See attached specifications**		P
UE000S3	ENCLOSURE FEED-THRU GROUND SLEEVE 3 PHASE	**See attached specifications**		P
UF0000H	FEED-THRU HORIZONTAL PARKING	COOPER	RTE 2637168CO1M	
UI0000C	INSULATED CAP	COOPER	LPC215	
UJ00002	JUNCTION, 2 WAY LOADBREAK	COOPER / ELASTIMOLD	LJ215C2U / 167J25BX	
UJ00003	JUNCTION, 3 WAY LOADBREAK	COOPER / ELASTIMOLD	LJ215C3U / 167J35BX	
UJ00004	JUNCTION, 4 WAY LOADBREAK	COOPER	LJ215C4U	
UJ0000P	JUNCTION, PEDESTAL SEC 14" ABOVE GRD	PENCELL	AG-15HDX-L35-EWB	N
UJ000ST	JUNCTION BOX, SEC STD 20" GRD LEVEL - GREEN	PENCELL	PE20HDX	N
UL010ST	LOAD BREAK ELBOW 1/0 STR (W - TEST POINT)	COOPER / ELASTIMOLD	LE215C06T / 166LR-C-5240	N
UT00003	TERMINATOR MOUNTING BRACKET 1/0 STR	3M	MB-3	N
UT00S10	TERMINATOR STEM 1/0 STR ONLY	3M	SC00010	N
UT010ST	TERMINATOR 1/0 STR	3M	5641	N
WAP0002	WIRE, PRIMARY #2 ACSR	SPARROW		
WAP0010	WIRE, PRIMARY 1/0 ACSR	RAVEN		
WAP0336	WIRE, PRIMARY 336.4 ACSR	MERLIN		
WAS002T	WIRE, SECONDARY #2 TRIPLEX	CONCH		
WAS004D	WIRE, SECONDARY #4 DUPLEX	TERRIER		
WAS004T	WIRE, SECONDARY #4 TRIPLEX	PERIWINKLE		
WAS006D	WIRE, SECONDARY #6 DUPLEX	SHEPARD		
WAS006T	WIRE, SECONDARY #6 TRIPLEX	HIPPA		
WAS010T	WIRE, SECONDARY 1/0 TRIPLEX	NERITINA		
WAS040Q	WIRE, SECONDARY 4/0 QUADREPLEX	APPALOOSA		
WAU004D	WIRE, UG SECONDARY #4 DUPLEX	DELGADO		
WAU004T	WIRE, UG SECONDARY #4 TRIPLEX	VASSAR		
WAU010T	WIRE, UG SECONDARY 1/0 TRIPLEX	BRENAU		
WAU030T	WIRE, UG SECONDARY 3/0 TRIPLEX	HOLLINS		
WAU040T	WIRE, UG SECONDARY 4/0 TRIPLEX	SWEETBRIAR		
WAU350T	WIRE, UG SECONDARY 350 TRIPLEX	WESLEYAN		
WCB0002	WIRE, BARE COPPER #2			
WCB004S	WIRE, BARE COPPER #4 SOFT DRAWN			
WCB006S	WIRE, BARE COPPER #6 SOFT DRAWN			
WCI0020	WIRE, INSULATED CU 2/0			
WCI0040	WIRE, INSULATED CU 4/0			
WCI101B	WIRE, INSULATED CU THHN #10 SOL - BLACK			
WCI010W	WIRE, INSULATED CU THHN #10 SOL - WHITE			

ITEM NO	Description	MFR	MFG NO	SUB
WO00012	WASHER, ROUND 1/2"			
WO00058	WASHER, SPRING 5/8"	CHANCE	C2050186	
WO0058S	WASHER, SQUARE 5/8"	CHANCE	6813	
ZA02524	TRANSFORMER, 25KVA 7620 120-240, TAP CONV 2 BUSHING	***See specifications attached***		
ZA05024 (*)	TRANSFORMER, 50KVA 7620 120-240, TAP CONV 2 BUSHING (SEE NLRED DIMENSION REQUIREMENTS)	***See detailed dimensions below - specifications attached***		
ZA07524	TRANSFORMER, 75KVA 7620 120-240, TAP CONV 2 BUSHING	***See specifications attached***		
	(*) NLRED 50KVA			
	DIMENSIONS: Case H = 33", 42" w/ Bushing, W = 22.5"			

NORTH LITTLE ROCK ELECTRIC DEPARTMENT

The attached drawing details the specifications for the NLR Electric Department
Fault Indicators, Enclosures & Ground Sleeves
Reference NLRED Stock Numbers:

- FIOH000
- FIUG000
- UE00001
- UE00003
- UE000S1
- UE000S3

NLRED
STK# FIOH000

POWER DELIVERY PRODUCTS INC.

Navigator LOAD MEMORY

- *100 A Minimum Trip Load Tracker*
- *72 Hour Peak Load Memory*
- *Mainline or Lateral Tap Application*
- *High Intensity LED Indication*
- *Visible in bright sunlight*
- *Self diagnostic battery circuit*
- *Replaceable Lithium Cells*
- *360 degree visibility*
- *Manual test and reset*
- *Automatic Inrush Restraint*
- *Micro Processor Controlled*

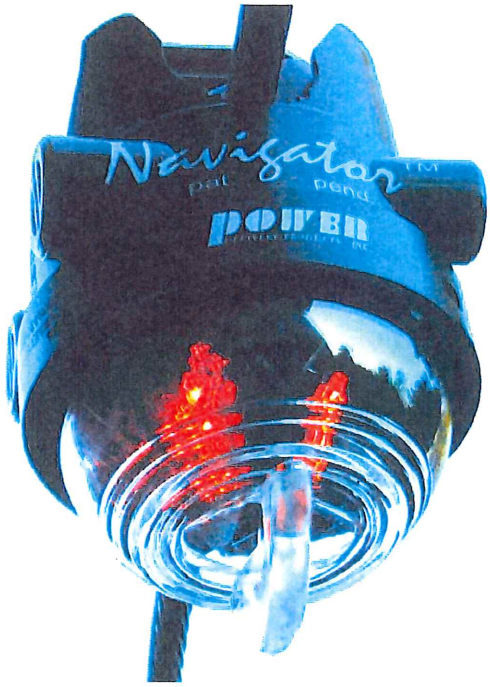

ANSI/IEEE 495-1986 Compliant
ISO 9001 Certified Factory

When applied to an overhead distribution line, the *Navigator* **LM** samples the load current and sets a trip point according to the daily peak load sampled on the circuit. This peak load trip response setting is stored in memory for up to 72 hours.
If a higher peak is established within 72 hours the FCI will reset the trip response to the new peak load. After 72 hours, the *Navigator* **LM** re-samples load current and sets a new trip point according to measured load current. The *Navigator* **LM** is a "one size fits all" Fault Indicator for minimum stock requirements.

New developments of Super High Intensity Light Emitting Diodes allow *Navigator* fault indicators to be easily seen on the brightest days.

The *Navigator* is the first self powered Fault Indicator with a diagnostic power source monitor. When the Lithium Cell power source becomes low, the *Navigator* will signal a low power condition via an amber flashing LED for up to 6 months.

2658 Holcomb Bridge Rd. Suite 100 Alpharetta, GA 30022
Phone: 770-587-9044 Fax: 770-587-4497

NLRED
STK# FIOH000

POWER DELIVERY PRODUCTS INC. Navigator LM

Electrical Data	MEETS OR EXCEEDS ANSI / IEEE STD. 495-1986
Trip Current Range	100 Amp Minimum
Temperature Range	-40 to +85 Degrees C
Accuracy	±10% @ 20 Degrees C
Auto Reset Time	2 H, 4 H, 8 H, 12H or 24 H
Current Reset	> 3 A load current
Voltage Reset	> 5 KV Line Voltage @ 60 seconds
Power Source	4 Lithium Oxide Cells, replaceable, 20 year Shelf Life
Indication	4 Red LEDs 2 Yellow LEDs
Total Indicating Time	>400 Hours
Flashing Frequency	30 per minute
Maximum Operating Voltage	46 KV
Current Withstand	25,000 A / 1 second sym. RMS
Adjacent Cable Immunity	10 inches @ 10KA
Cable Diameter Range	0.3 inches to 1.15 inches
Casing Material	UV stable polyamide glass reinforced
Current Transformer	Closed Core Ferrous Stainless Steel
Visibility	1/4 Mile Day / 1/2 Mile Night
Weight	15 oz.
Load Memory	72 Hours

Catalog Number Selection

41-2001-301

41 -	20	01 -	X SELECT ONE	X SELECT ONE	X SELECT ONE
Navigator Body	Navigator Load Memory	Cable Diameter 0.3" - 1.15"	1 = Current Reset Time Reset Manual Reset	0 = 100A Load Tracker	0 = 2 H Time Reset 1 = 4H Time Reset
			2 = Time Reset Manual Reset	7 = FCI PM Fixed Trip Select Trip Rating	2 = 8 H Time Reset 3 = 12 H Time Reset
			3 = Dual Reset 4 Red & 2 Yellow		6 = 24 H Time Reset
			5 = Voltage Reset Time Reset Manual Reset		

2658 Holcomb Bridge Rd. Suite 100 Alpharetta, GA 30022
Phone: 770-587-9044 Fax: 770-587-4497

05/14/04

0024

RECY

309400/01.3
41-2001-301
NAVIGATOR LM(C)-Dual ResetOverhead Fan
02.02.09

.01081
41-2001-301

Pcs.:
1

NLRED
STK# FIUG000

POWER DELIVERY PRODUCTS INC.

FCI LOAD TRACKER
UNDERGROUND SELF ADJUSTING TRIP

- *One size for all circuits*
- *Self adjusting to load current*
- *Proximity immunity to 2.3" at 10KA*
- *Automatic reset on time and current*
- *Local or remote LED indication*
- *Automatic In-Rush Restraint*
- *Load Tracking above 40 Amps*
- *900 flashing hours*
- *SCADA ready*
- *Elbow or Cable Mounted*
- *Lightweight = 10 ounces*
- *Closed Core CT Design*
- *Armed and Ready*
- *Self Powered*
- *Manual Test and Reset*
- *Hot stick applied*
- *5 minute installation time*

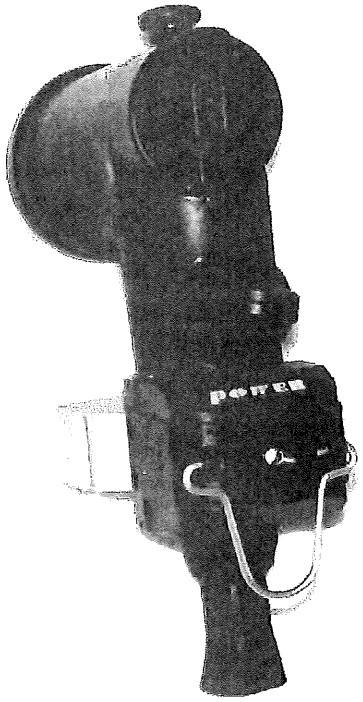

Cable or Elbow Mounting

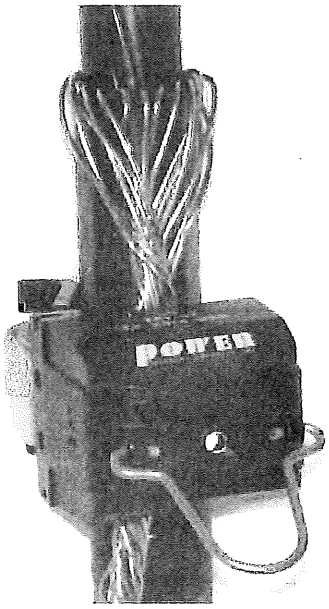

ANSI/IEEE 495-1986 Compliant
ISO 9001 Certified Factory

Load tracking capability allows utilities to use one fault indicator for all requirements without concern for coordination studies. The Load Tracker Faulted Circuit Indicator represents state of the art closed core design technology. The Load Tracker offers the highest degree of proximity immunity available. Underground circuits that require automatic reset type fault indicators have cable spacing constraints that require a high degree of immunity from adjacent cable circuits. In many cases false trip or false reset conditions can occur that will adversely affect faulted circuit indicators that are sensitive to and dependent on load current for their reset. The Load Tracker Faulted Circuit Indicator offers the highest degree of immunity, while still being able to sense and reset on current and/or time.
Hotstick applied, one size fits all, close proximity immunity, the ultimate answer to FCI requirements.

2658 Holcomb Bridge Rd. Suite 100 Alpharetta, GA 30022
Phone: 770-587-9044 Fax: 770-587-4497

NLRED
STK# FIUG000

POWER DELIVERY PRODUCTS INC.

FCI LOAD TRACKER
TECHNICAL DATA

Electrical Data	MEETS OR EXCEEDS ANSI/IEEE STD. 495-1986
Trip Current Range	200A Min. to 3 to 5 Times Load (200A DEFAULT)
Temperature Range	-40 to +85 Degrees C
Accuracy	±10% @ 20 Degrees C
Load Tracking	Initiated after Load = 40 A or greater
Auto Reset Time	4 Hours Standard, 8 to 24 Hour Optional
Current Reset	5 Amps Small Core / 10 Amps Large Core
Power Source	1.2 AH Lithium Oxide Cell, non-replaceable, 15 to 20 year life
Indication	Bright LED, Local or Remote optic
Total Indicating Time	>900 Hours
Flashing Frequency	30 per minute
Maximum Operating Voltage	46 KV
Current Withstand	25,000 amps sym. RMS / 170 msec.
Adjacent Cable Immunity	2.3 inches @ 10KA
Cable Diameter Range	.85 inches to 2.37 inches
Casing Material	UV stable polycarbonate
Current Transformer	Closed Core, corrosion protected galvanized and powder coated steel
Weight	10 oz.

Catalog Number Selection

29-3114-0F8

29	– 3	X Select Reset Option	XX Select Cable Diameter	– 000	– Trip	– Reset Time
29= Closed CoreUG	3= Load Tracker	0= 56 Second Current Reset 1= Full Time Current Reset 2= Time Reset only	14= .85 to 1.57 15 = 1.57 to 2.37	000	Automatic 200 A Min. to 3 to 5 X Load	4 Hour 8 Hour

2658 Holcomb Bridge Rd. Suite 100 Alpharetta, GA 30022
Phone: 770-587-9044 Fax: 770-587-4497

09-04

NLRED STK# UE00001

NLRED
STK# UE00001

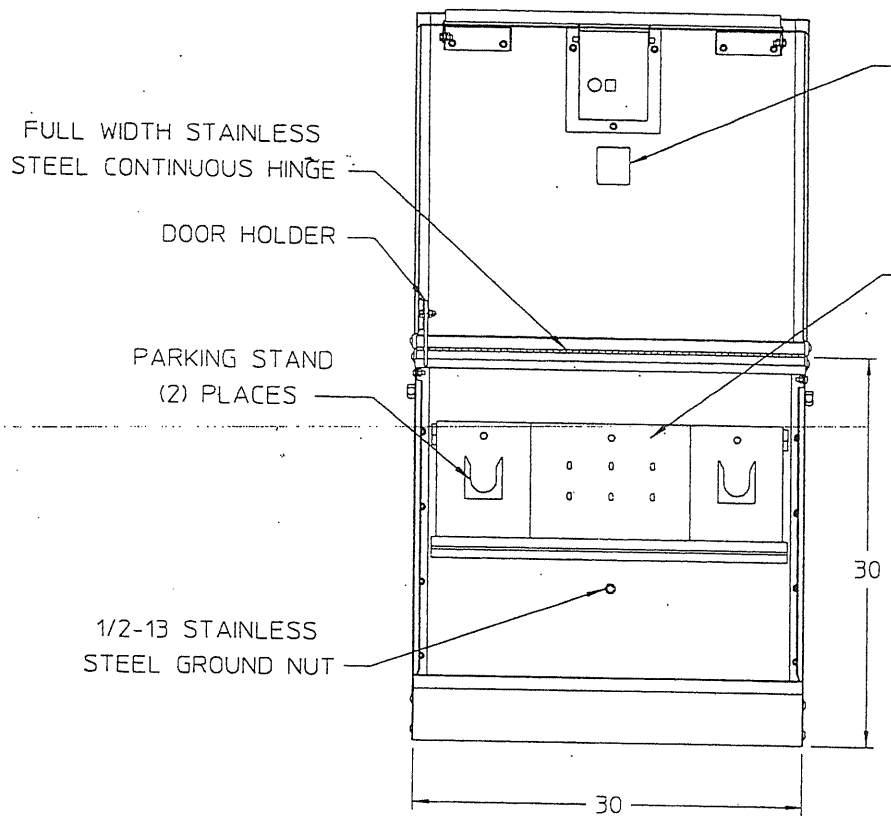

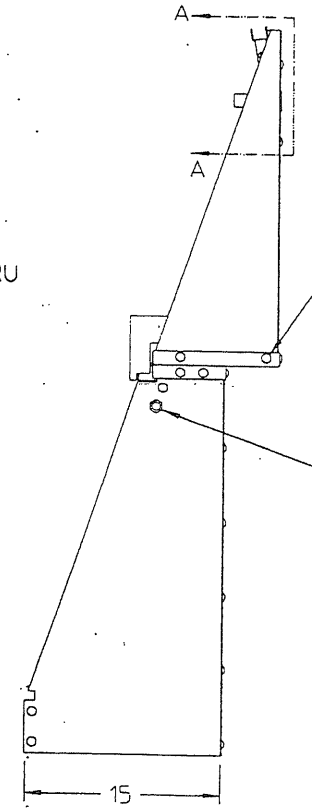

NOTES:
1. UNIT IS FABRICATED FROM 14 GA. GALVANIZED STEEL.
2. UNIT IS PAINTED MUNSELL 7GY 3.29/1.5 GREEN.
3. UNIT IS DESIGNED TO CONFORM TO ANSI C57.12.28.

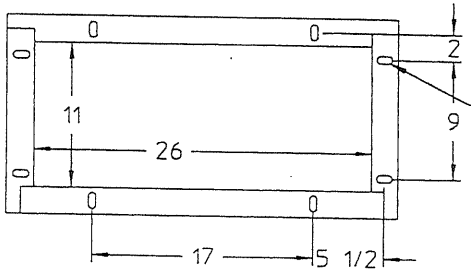

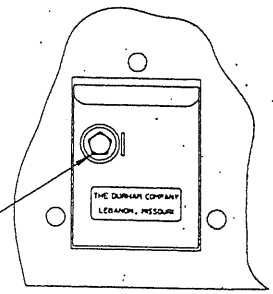

SECTION A-A
(ROTATED 180 DEGREES)

3-17-98	REV WIND GUS & RTNR BODY JRM
01-20-97	REV LATCH & PENTA BOLT HLB

SECT PED. 1P. 15KV

CATALOG NO. AMSPR12124-0.

DWG NO.

THE DURHAM COMPANY
LEBANON, MISSOURI

DATE 4-1-92

BY DPB

NLRF D STK # UE00003

NLRED

STK# UE00003

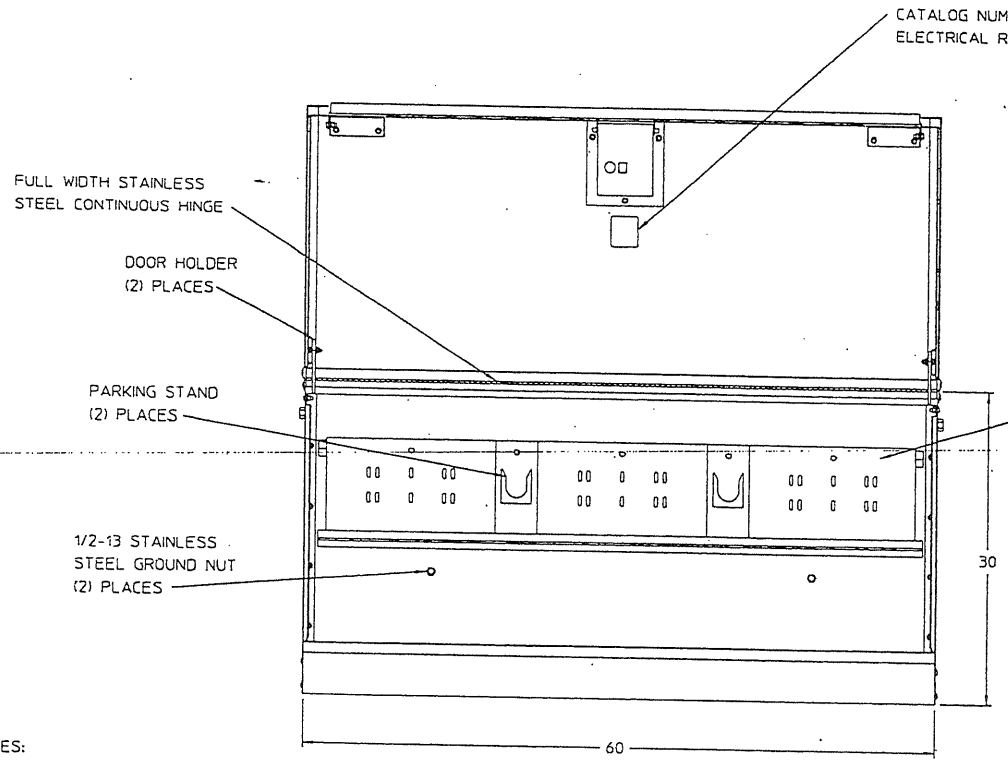

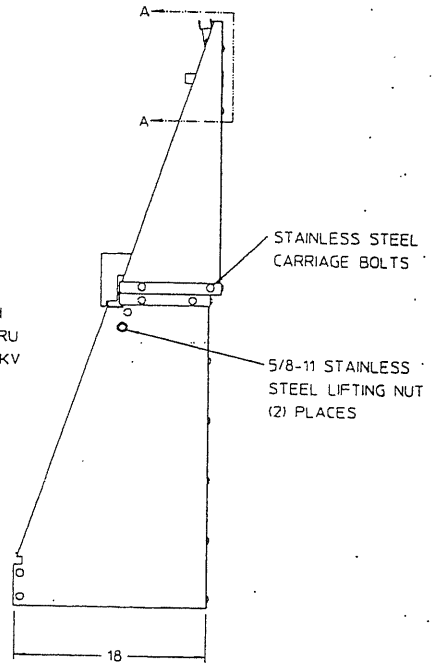

NOTES:

1. UNIT IS FABRICATED FROM 14 GA. GALVANIZED STEEL.
2. UNIT IS PAINTED MUNSELL 7GY 3.29/1.5 GREEN.
3. UNIT IS DESIGNED TO CONFORM TO ANSI C57.12.28.

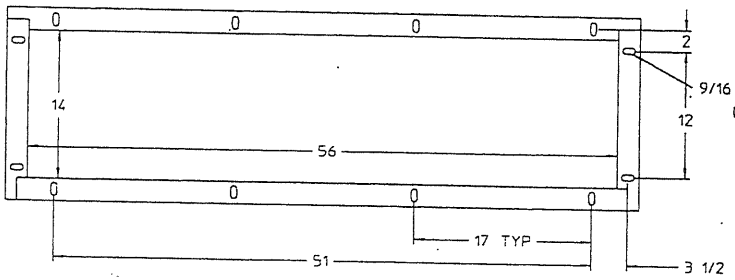

BOTTOM VIEW

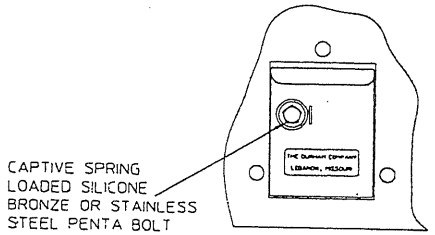

SECTION A-A
(ROTATED 180 DEGREES)

3-16-98	REV WIND GUS & RTNR BODY JRM	SECT PED. 3P. 25KV	CATALOG NO. AMSPR32428-0	DWG NO.
01-20-97	REV LATCH & PENTA BOLT HLB	THE DURHAM COMPANY LEBANON, MISSOURI		DATE 3-2-93
				BY KLG

NLRED

NLRED
STK# UE000S1

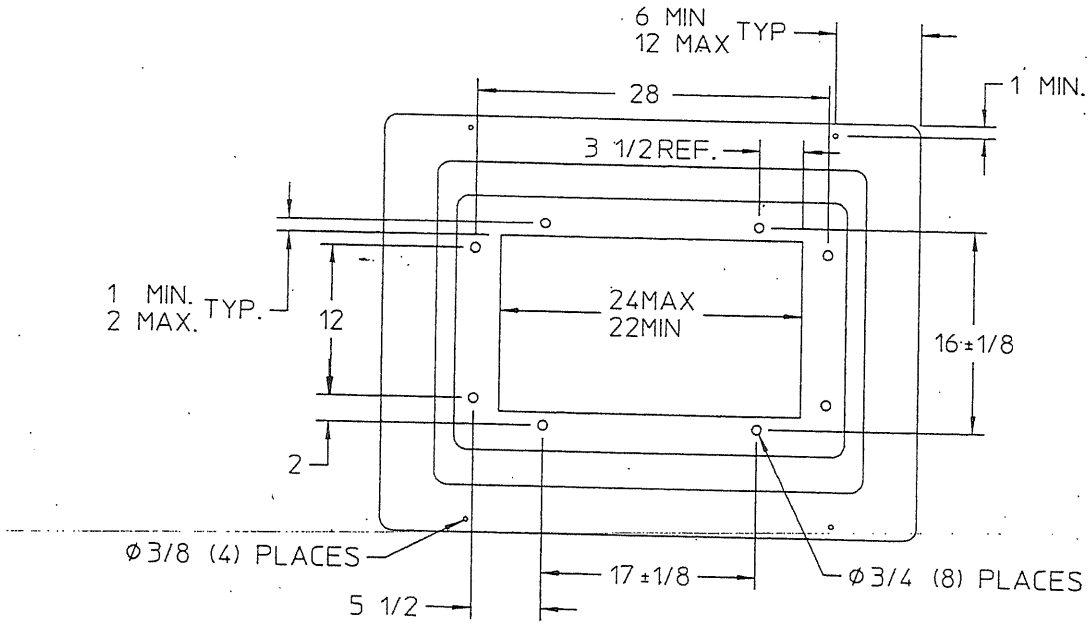

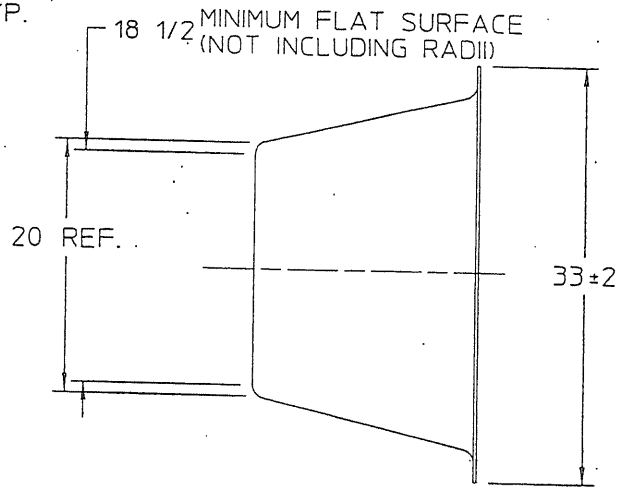

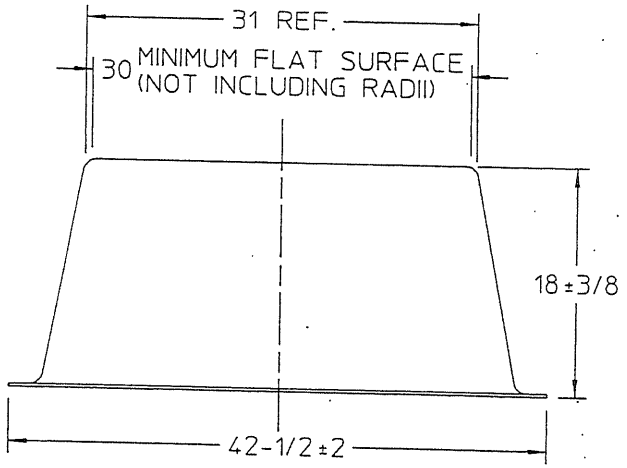

REV	DATE	DESCRIPTION	BY

TOLERANCES (UNLESS OTHERWISE NOTED)

SHEARED BLANKS & FRACTIONS	±.032
OPEN NOTCH TO SHEARED EDGE	±.032
PUNCHED HOLES/SHAPES	±.003
FORMED FLANGES	±.032
ALL OTHER DIMENSIONS	±.015

FINAL ASSEMBLY DRAWING DIMENSIONS ARE NOMINAL. REFER TO INDIVIDUAL PART/SUB FOR ALLOWABLE CUMULATIVE TOLERANCE

DATE 11/18/2009 BY JGB

DWG NO. GSF183018

FIBERGLASS SLEEVE 183018

THE DURHAM COMPANY
www.durhamcompany.com
P.O. BOX 908
722 DURHAM ROAD
LEBANON, MO 65536
P.O. BOX 229
1435 N. INDUSTRIAL DR.
HOUSTON, MO 65483

THIS DRAWING IS THE PROPERTY OF THE DURHAM COMPANY AND CONTAINS PROPRIETARY AND CONFIDENTIAL INFORMATION WHICH MUST NOT BE DUPLICATED, USED OR DISCLOSED OTHER THAN AS EXPRESSLY AUTHORIZED BY THE DURHAM COMPANY
SPECIFICATIONS SUBJECT TO CHANGE WITHOUT NOTICE

NLRED

NLRED
STK# UE000S3

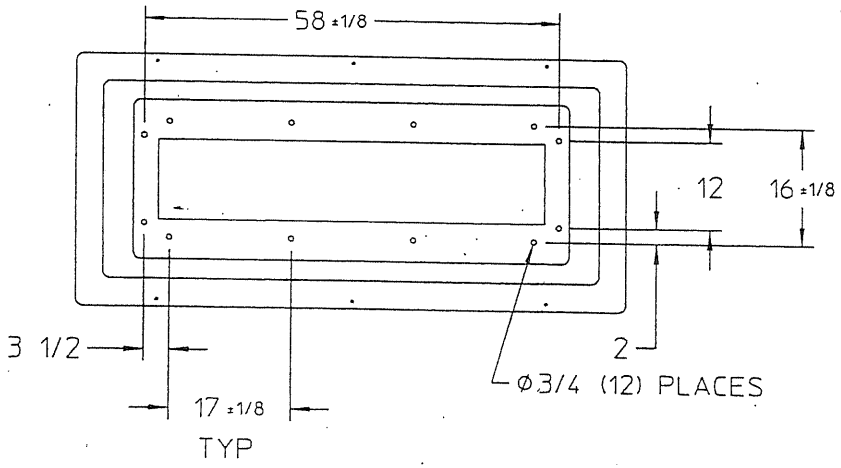

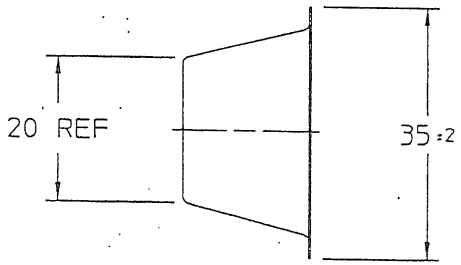

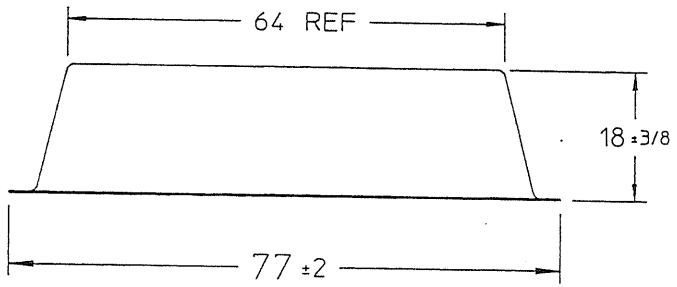

REV	DATE	DESCRIPTION	BY

TOLERANCES (UNLESS OTHERWISE NOTED)

SHEARED BLANKS & FRACTIONS	±.032
OPEN NOTCH TO SHEARED EDGE	±.032
PUNCHED HOLES/SHAPES	±.003
FORMED FLANGES	±.032
ALL OTHER DIMENSIONS	±.015

FINAL ASSEMBLY DRAWING DIMENSIONS ARE NOMINAL. REFER TO INDIVIDUAL PART/SUB FOR ALLOWABLE CUMULATIVE TOLERANCE

DATE 7/22/2008 BY JGB

DWG NO. GSF186018

FIBERGLASS GROUND SLEEVE 186018

THE DURHAM COMPANY
www.durhamcompany.com
P.O. BOX 908
722 DURHAM ROAD
LEBANON, MO 65536
P.O. BOX 229
1435 N. INDUSTRIAL DR.
HOUSTON, MO 65483

THIS DRAWING IS THE PROPERTY OF THE DURHAM COMPANY AND CONTAINS PROPRIETARY AND CONFIDENTIAL INFORMATION WHICH MUST NOT BE DUPLICATED; USED OR DISCLOSED OTHER THAN AS EXPRESSLY AUTHORIZED BY THE DURHAM COMPANY
SPECIFICATIONS SUBJECT TO CHANGE WITHOUT NOTICE

NORTH LITTLE ROCK ELECTRIC DEPARTMENT

SPECIFICATION GUIDE - OVERHEAD TYPE DISTRIBUTION TRANSFORMERS

5 - 167KVA

CITY OF NORTH LITTLE ROCK
ELECTRIC DEPARTMENT
SPECIFICATION GUIDE

Functional Specification for Single-Phase Overhead Type Distribution Transformers 5 – 167 kVA

1.0 Scope

1.1. This specification covers the electrical and mechanical characteristics of 5 - 167 kVA Single-Phase Overhead Type Distribution Transformers.

2.0 Applicable Standards

2.1. All characteristics, definitions, and terminology, except as specifically covered in this specification, shall be in accordance with the latest revision of the following ANSI/IEEE, Department of Energy, and NEMA standards.

C57.12.00 – IEEE Standard for Standard General Requirements for Liquid-Immersed Distribution, Power, and Regulating Transformers

C57.12.20 – IEEE Standard for Overhead-Type Distribution Transformers, 500kVA and Smaller: High Voltage, 34500V and Below; Low Voltage, 7970/13800Y V and below

C57.12.31 – IEEE Standard for Pole Mounted Equipment – Enclosure Integrity

C57.12.35 – IEEE Standard for Bar Coding for Distribution Transformers

C57.12.90 – IEEE Standard Test Code for Liquid-Immersed Distribution, Power, and Regulating Transformers

C57.12.91 – IEEE Guide for Loading Mineral-Oil-Immersed Transformers

NEMA TR 1-1993 (R2000) – Transformers, Regulators and Reactors, Table 0-2 Audible Sound Levels

10 CFR Part 431 – Department of Energy – Energy Conservation Program for Commercial Equipment: Distribution Transformers Energy Conservation Standards; Final Rule

[ ] **Primary Protected** – Primary overvoltage protection shall be provided by an externally mounted Polymer-Housed MOV arrester.

[X] Externally mounted 10 KV 8.4 MCOV Polymer MOV arrester with insulated copper lead connected to X1 primary bushing

The secondary voltage shall be one of the following and the basic insulation level (BIL) of the secondary voltage shall be 30 kV.

120/240 (5-100kVA - 3 Bushings, 167kVA - 4 Bushings)
240/480 (5-100kVA - 3 Bushings, 167kVA - 4 Bushings)
120 (2 Bushings)
277 (2 Bushings)

The applicable secondary voltage shall be specified on the inquiry.

The transformer may be furnished with full capacity high-voltage taps. The tap changer shall be clearly labeled to reflect that the transformer must be de-energized before operating the tap changer as required in Section 7.2.1 of ANSI C57.12.20. The tap changer shall be operable on the higher voltage only for transformers with dual voltage primaries. The unit shall have the following tap configurations:

Two – 2 ½% taps above and below rated voltage (Split Taps)

Construction

The core and coil shall be vacuum processed to ensure maximum penetration of insulating fluid into the coil insulation system. While under vacuum, the transformer will be filled with preheated filtered degassed insulating fluid. The core shall be manufactured from burr-free, grain-oriented silicon steel and shall be precisely stacked to eliminate gaps in the corner joints. The coil shall be insulated with B-stage, epoxy coated, diamond pattern insulating paper, which shall be thermally cured under pressure to ensure proper bonding of conductor and paper.

The tank shall include a pressure relief device as a means to relieve pressure in excess of pressure resulting from normal operation. The venting and sealing characteristics shall be as follows:

Cracking pressure: 10psig ± 2 psig
Resealing pressure: 6 psig minimum
Zero leakage from reseal pressure to -8 psig
Flow at 15 psig: 35 SCFM minimum

The tank provided shall have a recessed tank bottom which offers protection when sliding over rough surfaces.

The tank shall have an internal mark, which indicates the proper oil level per Section 7.2.3 of ANSI C57.12.20.

The tank shall be provided with a mild steel cover ring with stainless steel cover ring loops and a stainless steel bolt. A bronze nut shall also be provided to eliminate corrosion problems and avoid galling.

The tanks shall be complete with an anodized aluminum laser engraved nameplate. Nameplate shall conform to ANSI C57.12.00, nameplate A.

The tank shall include arrester mounting pads, grounding provisions, ANSI support lugs (hanger brackets) and lift lugs.

Tank sizes shall conform to the dimensions listed on the attached drawing.

The quantity of hanger brackets (one set or two) shall be specified on the inquiry.

High Voltage Bushings and Terminal

The high-voltage bushings provided shall be in accordance with Table 3.

Table 3
Electrical Characteristics of Bushings

BIL Withstand (kV)	Creepage Distance [1] Inches	Creepage Distance [1] Millimeters	60-Hz Dry 1-Minute Withstand (kV)	60-Hz Wet 10-Second Withstand (kV)
30	-	-	10	6
45	-	-	15	13
60	-	-	21	20
75	-	-	27	24
95	10½ ± ½	267 ± 13	35	30
150	17	432	60	50
Single-Phase Transformer Bushings Only				
95 [2]	16½ ± 1½	419 ± 38	35	30
125	16½ ± 1½	419 ± 38	42	36
200	26	660	80	75

1. Creepage distances are minimum values where no tolerance is specified.
2. For 16.34-kV rating only.

The bushing terminals provided shall be tin plated to accommodate both aluminum and copper conductors. The size of these terminals shall be in accordance with Table 4.

Table 4
High-Voltage Terminal Sizes for Single-Phase Transformers

Size of Terminal Opening Inches Millimeters	AWG Size of Conductor Terminal will Accommodate	kVA Range for High-Voltage Rating of: 5 kV And below / 7.2 kV to 34.5kV
5/16 7.9	No 8 Solid to No 2 Stranded	10-167 10-500
5/8 15.9	No 6 Solid to No 4/0-19 Stranded	250-500 --------

The color of the bushings shall match Light Gray Number 70, Munsell Notation 5BG7.0/0.4.

The number of high voltage bushings (one or two) shall be specified on the inquiry

Low Voltage Bushings and Terminals

The low-voltage bushings provided shall be in accordance with Table 3.

The bushing terminals provided shall be tin plated to accommodate both aluminum and copper conductors. The size of the terminals shall be in accordance with Table 5.

Table 5
Low-Voltage Terminal Sizes for Single-Phase Transformers

			Transformer Low Voltage Rating (volts)		
Size of Terminal Opening Inches	Millimeters	AWG Size of Conductor Terminal will Accommodate	120/240	240/480	277
5/16	7.9	No 8 Solid to No 2 Stranded	-	-	-
5/8	15.9	No 6 Solid to No 4/0-19 Stranded	10-15	10-25	10-25
13/16	20.6	No 2 Solid to 350 kcmil-19 Stranded	25-50	37 ½ - 100	37 ½ - 100
15/16	23.8	No 1/0 Solid to 500 kcmil-37 Stranded	75	-	-
1-1/4	31.8	No 2/0 Solid to 1000 kcmil-61 Stranded	100	-	-
Spade H		---	167-250	167-500	167-250

The internal secondary leads shall be permanently embossed with the letters A, B, C, and D per ANSI C57.12.00 and C57.12.20. This marking can be used as a means to locate such leads with respect to one another for internal reconnection.

[ ] **Primary Protected** – Primary overvoltage protection shall be provided by an externally mounted Polymer-Housed MOV arrester.

[X] Externally mounted 10 KV 8.4 KV MOV arrester

Finish Performance Requirements

Transformer shall be painted Munsell Notation 5BG7.0/0.4, ANSI 70 Gray. The coating system shall meet or exceed ANSI C57.12.31 coating system requirements for pole -mount equipment, including the following performance tests:

1. Salt spray test per ASTM B117 / D1654
2. Cross hatch adhesion test ASTM D3359
3. Humidity test per ASTM D4585 / D3363
4. Impact test per ASTM D2794 / B1117
5. Ultraviolet accelerated weathering (QUV) test per ASTM G154 / D523
6. Abrasion resistance Taber abraser test per ASTM D4060 / B1117

Certified test data shall be furnished upon request.

Production Testing

All units shall be tested for the following:

- No-Load (85°C or 20°C) losses at rated current
- Total (85°C) losses at rated current
- Percent Impedance (85°C) at rated current
- Excitation current (100% voltage) test
- Winding resistance measurement tests
- Ratio tests using all tap settings
- Polarity and phase relation tests
- Induced potential tests
- Full wave and reduced wave impulse test

The manufacturer shall provide the guaranteed average no-load and load losses for the unit at 85°C when specified. These losses will be subject to the tolerances listed in Table 6.

Table 6
Tolerance for Transformer Losses

Number of Units on One Order	Basis of Determination	No-Load Losses (%)	Total Losses (%)
1	1 unit	10	6
2 or more	Each Unit	10	6
2 or more	Average of all units	0	0

Accessories

The following checked accessories shall be provided:

- [ ] 15 kV insulated cover
- [ ] PVC bird guard(s)
- [ ] Handwheel bird guard(s)
- [ ] Non-PCB Decal
- [ ] Primary Voltage Decal
- [ ] Secondary Voltage Decal
- [ ] Extra creep bushing(s)
- [ ] Stainless steel hardware
- [ ] Stainless steel tank
- [ ] Stainless steel cover
- [ ] Stainless steel cover band
- [ ] ½" drain valve with sampling device
- [ ] Tank ground connector
- [ ] Ground strap

Any additional accessories will be specified on the inquiry.

Shipping

1.1. The unit shall be sufficiently banded or blocked to a suitable wood pallet.

Data With Proposal

1.2. The following data shall be submitted with the proposal when specified:

- Core losses
- Winding losses
- Percent Impedance

"B" & "C" Dimensions include arresters & radiators if applicable.

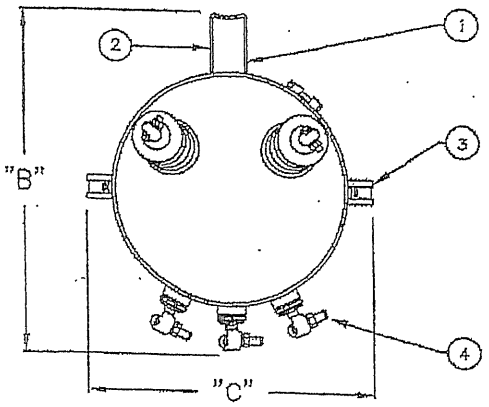

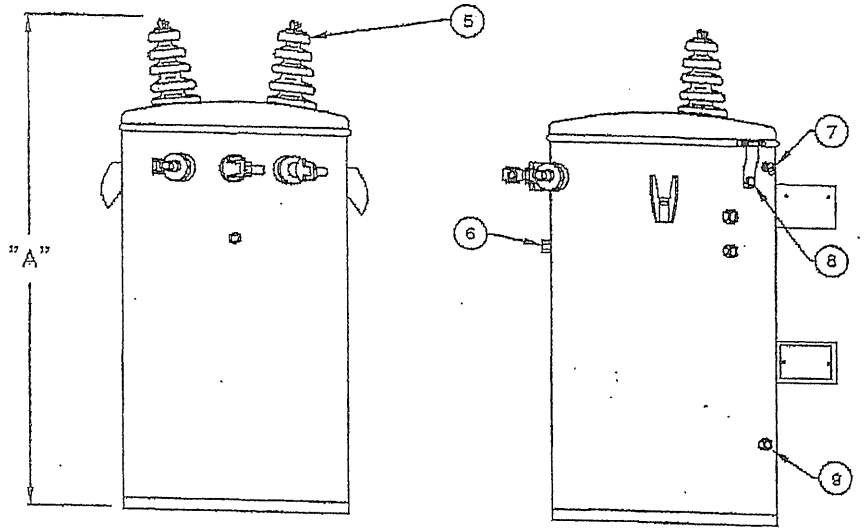

GENERIC-1H2B 08-19-05

H. V.: 7620/13200Y L. V.: 120/240

B.I.L.: 95 B.I.L.: 30

TAPS: 2.5 ABOVEAND 2.5 BELOW CSP ____ CONV ✓

PART	DESCRIPTION	QUANTITY
1	HANGER BRACKETS TYPE A ☑ B ☑	1 SET
2	NAMEPLATE (ON LOWER BRACKET)	1
3	LIFTING LUGS	2
4	L. V. BUSHING (QUANTITY: ☐ 2 ☑ 3 ☐ 4)	
	☑ EYEBOLT ☐ 2 HOLE "G" SPADE ☐ 4 HOLE "H" SPADE	
5	H. V. BUSHING ☐ HV BIRDGUARDS	2
6	GROUNDING PROVISION ☐ WITH GROUND STRAP	1
7	PRESSURE RELIEF DEVICE	1
8	COVER GROUND STRAP	1
9	TANK GROUNDING PROVISION ☑ GROUND LUG ☐ GROUND LUG	1 / 2

☑ TAP or DUAL VOLTAGE SWITCH
☑ EXTERNAL ARRESTER ☐ UNDER-OIL ARRESTER
☐ SECONDARY BREAKER HANDLE ☐ OVERLOAD LIGHT
☐ SPECIAL STENCILING or DECALS ☐ PCB DECAL
☐ RADIATORS
☐ OTHER

ITEM AND/OR STOCK #	KVA	DIMENSIONS IN INCHES A	B	C	APPROX. GAL. OIL	APPROX. WEIGHT LBS
1	25	34.9	23.6	21	18.5	356
2	50	42.9	27.6	25	39.1	698
3	75	50.9	29.3	25	50.3	848

CUSTOMER:
CITY OF NORTH LITTLE ROCK

SCALE:	DATE:	BY:	QUOTE NUMBER:
NTS	1/5/05	KO	192504

NLRED
OH TRANSFORMER
DATA