O-21-42

ORDINANCE NO. _____

AN ORDINANCE WAIVING FORMAL BIDDING REQUIREMENTS AND AUTHORIZING PAYMENT TO JLC COMMUNICATIONS, INC. FOR THE PURCHASE AND INSTALLATION OF FIBER OPTIC CABLES IN THE JUSTICE BUILDING FOR THE NORTH LITTLE ROCK ENGINEERING DEPARTMENT; DECLARING AN EMERGENCY; AND FOR OTHER PURPOSES.

WHEREAS, Ark. Code Ann. § 14-58-303 requires City purchases exceeding the amount of $20,000 to follow statutory procedures of local advertisement and opening of sealed bids which may only be waived in exceptional situations where bidding is deemed not feasible or practical; and

WHEREAS, the City of North Little Rock ("the City") is currently constructing a new Justice Building that requires the purchase and installation of fiber optic cables; and

WHEREAS, due to administrative oversight, public bidding procedures were not implemented; and

WHEREAS, JLC Communications, Inc., 25520 Interstate 30, Bryant, AR 72022, is the only local contractor that does fiber optic cable installation and has a history of winning public bids, as their overhead costs are often lower than out-of-state bids; and

WHEREAS, JLC Communications, Inc. has helped the IT Department to plan and buy materials for this project, and removing them at this stage would be unethical; and

WHEREAS, the cost of the purchase and installation will be Eighty Seven Thousand Three Hundred Sixty Five and 45/100 Cents ($87,365.45) (see Quote and Work Summary map from JLC Communications, Inc. attached hereto as Exhibit A).

NOW, THEREFORE, BE IT ORDAINED BY THE CITY COUNCIL OF THE CITY OF NORTH LITTLE ROCK, ARKANSAS:

SECTION 1: That formal bidding is hereby waived in connection with the purchase and installation of fiber optic cables for the Justice building.

SECTION 2: That payment JLC Communications, Inc. is hereby authorized in the amount of $87,365.45, and the cost shall be paid from the Electric Department 2021 Budget, Item 500-14 "Fiber Installation, Labor, & Materials".

SECTION 3: That all ordinances or parts of ordinances in conflict herewith are hereby repealed to the extent of the conflict.

SECTION 4: That the provisions of this Ordinance are hereby declared to be severable, and if any section, phrase or provision shall be declared or held invalid, such invalidity shall not affect the remainder of the sections, phrases or provisions.

SECTION 5: It is hereby found and determined that it is in the best interest of the City of North Little Rock to purchase and install fiber optic cables for the Justice Building, and is necessary for the immediate preservation of the public health, safety and welfare; THEREFORE, an emergency is hereby declared to exist, and this Ordinance shall be in full force and effect from and after its passage and approval.

PASSED:

APPROVED:

Mayor Terry C. Hartwick

SPONSOR:

Terry C. Hartwick By AF

Mayor Terry C. Hartwick

ATTEST:

Diane Whitbey, City Clerk

APPROVED AS TO FORM:

Amy Beckman Fields, City Attorney

PREPARED BY THE OFFICE OF THE CITY ATTORNEY/kt

FILED 11:10 A.M. _____ P.M.

By A. Fields

DATE 5-18-21

Diane Whitbey, City Clerk and Collector
North Little Rock, Arkansas

RECEIVED BY S. Ussery

TELECOMMUNICATIONS PROPOSAL

customized for

City of North Little Rock
120 Main Street
North Little Rock, AR 72114

EXHIBIT
A

Qty	Description	Price
	North Little Rock	
	Phase 1 Revised	
	Material	$5,381.45
	Labor	$81,984.00
	Underground Construction	
	185' Trench	
	2,259' Directional Bore	
	Aerial Construction 3,224'	
	Fiber Splices 606	
Total Project		$87,365.45

Quotes valid for 30 days

Prepared by, Jay Hart

5/3/2021

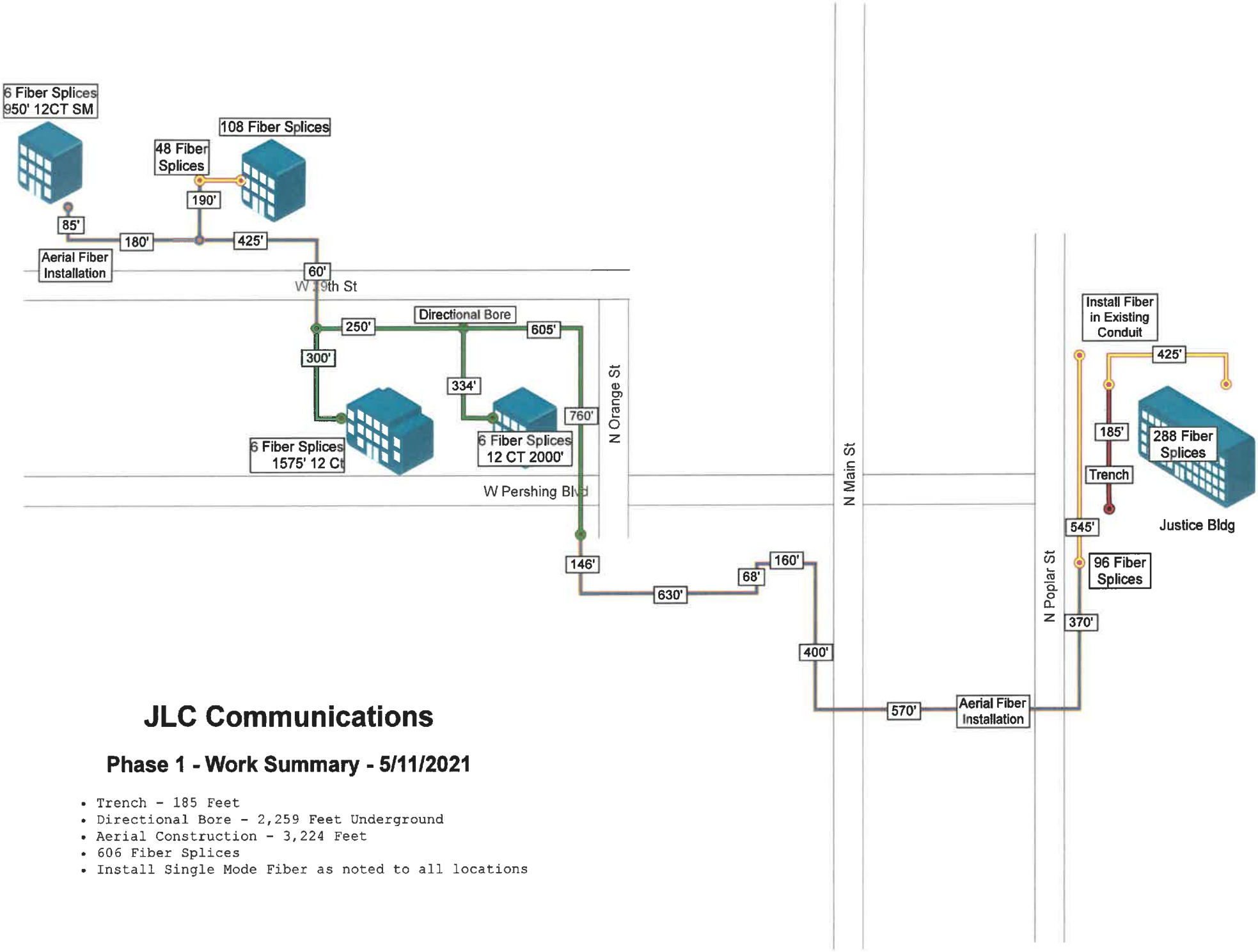

JLC Communications

Phase 1 - Work Summary - 5/11/2021

- Trench - 185 Feet
- Directional Bore - 2,259 Feet Underground
- Aerial Construction - 3,224 Feet
- 606 Fiber Splices
- Install Single Mode Fiber as noted to all locations