NORTH LITTLE ROCK
ELECTRIC DEPARTMENT

ELECTRIC SERVICE STANDARDS

Adopted _____, Ord. No. _____

Table of Contents

Section 1 Foreword and Terms 1

1.1 Purpose 1
1.2 Service Contracts, Rate Schedules, and Contact Information 1
1.3 Service Standards Availability and Revisions 1
1.4 General Terms Used In Service Standards 1
1.5 Electrical Terms Used In Service Standards 4

1.6 Enforcement 6

Section 2 General Information 7

2.1 Safety 7

2.2 Code Requirements 7

2.3 Inspections and Approvals 7
2.4 Distance Requirements for Customer Structures 8
2.5 Attachments to Department Poles 8

2.6 Additional Department Documents and Standards 8

Section 3 Signing Up For Electric Service 9

3.1 Application for Service 9

3.2 Pre-Installation Information 9

3.3 Existing Residential Service 9

3.4 New Residential Service or Residential Overhead Service to Underground Conversion 10

3.5 New Commercial or Industrial Service or Service Retrofit 11

Section 4 Interconnection and Distributed Generation 13

4.1 Residential Generation (Less than 25 kW) 13

4.2 Commercial or Industrial Generation 13

4.3 Connection of Backup Generation 13

Section 5 Types of Service 14

5.1 General Characteristics 14

5.2 Generally Available Types of Service 14

5.3 Load Sheet 14

5.4 Availability of Three Phase Service 15

5.5 Facilities for Highly Fluctuating or Special Loads 15

5.6 Temporary Service 15

5.7 Specialty Permanent Service 16
5.7.1 Services for Mobile Home Parks, Trailer Parks, and Individually Located Mobile Homes 16
5.7.2 Central Service Poles/Load Center Distribution Pole For A Farmstead 16
5.7.3 Apartment Building Service 16

5.7.4 Vertical Distribution System 16
5.7.5 Service to Marinas and Boat Docks 16

Section 6 Services Introduction 21

6.1 General Comments 21

6.2 Easement for Service Facilities 21

6.3 Initial Clearing of Property for Right-of-Way 22

6.4 Relocation of Department's Facilities 22

Section 7 Overhead Service 23

7.1 General Comments 23

7.2 Ownership of Facilities 23

7.3 Point of Attachment 23

7.4 Clearances 24

7.5 Length of Service Drop 24

7.6 Method of Attachment 24

7.7 Extension of Overhead Distribution Facilities 24

7.8 480 Volt Metered Service 24

Section 8 Underground Service and Installations 26

8.1 General Comments 26

8.2 Ownership of Facilities - Residential 26

8.3 Ownership of Facilities – Commercial and Industrial 26

8.4 Agreement for Underground Service 26

8.5 Specification Requirements 27

8.6 Requirements for Obtaining Underground Residential Service 27
8.6.1 General Comments 27
8.6.2 Underground Electric Service for New Residential Subdivisions 27
8.6.3 Underground Service From An Underground Distribution System 28
8.6.4 Underground Service From Overhead Distribution System 28
8.6.5 Underground Service Replacing Existing Overhead Service 28

8.7 Requirements for Commercial, Industrial, and Other Non- Residential Underground Service 29
8.7.1 Underground Service From Underground Systems 29
8.7.2 Underground Secondary Service From Overhead Systems 29

8.8 Underground Electric Service for Mobile Home Parks 29

8.9 Conduit 30
8.9.1 General Comments 30
8.9.2 Installation of Conduit 30
8.9.3 Types of Conduit 32
8.9.4 Spare Conduits 32

8.10 Conductors 32
8.10.1 General Comments 32
8.10.2 Conductors Used in Underground Residential Installations 33
8.10.3 Conductors Used in Underground Non-Residential Installations 33

8.11 Termination of Conductors *33*
8.11.1 General Comments 33
8.11.2 Termination in Pad Mount Transformers 33

8.12 Metering for Underground Service *33*

8.13 Transformers Used in Underground Installations *34*
8.13.1 General Comments 34
8.13.2 Transformer Pads or Slabs 34

Section 9 Transformers, Vaults & Substations **39**

9.1 General Comments *39*

9.2 Fences, Screen Walls, Decorative Walls *39*

9.3 Types of Transformer Installations *39*

9.4 Pad mount Transformers *39*

9.5 Termination of Secondary Conductors to Transformers For Non-Residential Services *40*

Section 10 Metering Installations and Equipment **41**

10.1 General Comments *41*

10.2 Meter Connections & Seals *41*

10.3 Meter Clearance *41*

10.4 Outdoor Meters *41*

10.5 Location Of Meter Installations *42*

10.6 Grouping Of Meters *42*

10.7 Meter Mounting Height *43*

10.8 Types of Meter Installations *43*
10.8.1 Self-contained Metering Installations 43
10.8.2 Instrument Transformer Installation 43
10.8.3 Totalized Metering 44

10.9 Primary Metering Installations *44*

10.10 Meter Grounding *45*

Section 11 Customer's Service Installation **48**

11.1 General Comments *48*

11.2 Inspection and Approvals *48*

11.3 Meter Requirements *48*

11.4 Service Entrance Conductors *49*

11.5 Grounding of Service Entrances *49*

11.6 Service Entrance from Overhead System *49*
11.6.1 General Comments 49
11.6.2 Service Entrance Masts 49

11.7 Service Entrance from Underground Distribution System *50*

11.8 Service Disconnecting Means *50*
11.8.1 Disconnecting Means for Services Less than 600 Volts 50
11.8.2 Disconnecting Means for Services Over 600 Volts 51

11.9 Isolation Switches for Services Over 600 Volts *51*

Section 12 Customer's Electrical Equipment **52**

12.1 General Comments *52*

12.2 Radio and Television Interference *52*

12.3 Electric Heating *52*

12.4 Motor - Voltage Rating *52*

12.5 Motor Starting *53*
12.5.1 General Comments 53
12.5.2 Single Phase Motors 53
12.5.3 Three Phase Motors 55
12.5.4 Motor Starting and Control Equipment 55

12.6 Critical Service Motor Operation *56*

12.7 Motor Protection *56*
12.7.1 Phase Reversal Protection 56
12.7.2 Over Current Protection 56
12.7.3 Partial or Complete Loss of One or More Phases 56

Section 13 Customer's Special Equipment **57**

13.1 General Comments *57*

13.2 Additional Electric Facilities *57*

13.3 Radio and Television Antennae *57*

13.4 CATV and Carrier Installations *57*

13.5 Electric Welders and Furnaces *58*

13.6 Radio and Television Transmitters, X-ray, Diathermy, and High Frequency Heating Equipment58

13.7 Customer's Capacitors and Other Reactive Equipment *58*

13.8 Emergency Standby Generators *59*
13.8.1 General Comments 59
13.8.2 Parallel Operation of the Customer's Generation 59

13.9 Converters - Operation of Three Phase Motors from Single Phase Electric Supply *59*

13.10 Dual Feeders and Load Transfer Equipment *59*

Section 14 Customer's Service Obligations and Protection **61**

14.1 Lightning and Other Surge Protection *61*

14.2 Public Sign Clearance *61*

14.3 Working in Close Proximity to the Department's Facilities *61*

14.4 Attachments to Department Poles *61*

SECTION 1 FOREWORD AND TERMS

1.1 Purpose

The information contained in this book is presented for Architects', Builders', Contractors', Developers', Engineers', Electricians', Owners', and others' to use in planning electrical wiring and apparatus installations intended for connection to the lines of the North Little Rock Electric Dept. Current procedures, practices and requirements, adopted by NLRED to assure economical, and satisfactory service to Customers, consistent with the most recent version of the National Electrical Safety Code (NESC), are set forth and discussed herein. (Note: Any statement concerning the National Electrical Code (NEC) refers to Customer owned facilities.) Any mention of the NESC or the NEC indicates the basic provisions that are considered necessary for safety. Specific information regarding procedures that are available only in certain states can be found at the end of each section. This book is limited to information considered essential in planning installations which are adequate and satisfactory for the many uses and conveniences of electric service.

1.2 Service Contracts, Rate Schedules, and Contact Information

The following documents are not included within these Service Standards:

1. **Service Regulations** (or Terms and Conditions) which prescribe the rules, obligations, and liabilities of the Company in providing service and the Customer in receiving electric service
2. **Rate Schedules** which set the price, the periods of taking, and the payment terms for electric service
3. **Service Agreements** wherein the Department and the Customer agree to specific quantities and types of service

The Departments' currently approved Service Standards, Rate Schedules, Service Agreements, and other forms are available by contacting the Department.

The North Little Rock Electric Department (NLRED) can be contacted directly by phone Monday through Friday 8am to 5 pm at (501) 975-8888.

1.3 Service Standards Availability and Revisions

The Service Standards are downloadable from the Department's website at www.nlrelectric.com.

These Service Standards will be revised from time to time as new methods and improved equipment become available. This book will be re-issued periodically with all revisions included. Changes of policy made after the publication date, will be in effect despite the fact that they will not be in this document. If the issue date is over three years old, contact the Department to determine if this is the current edition or to obtain supplementary information.

1.4 General Terms Used In Service Standards

(Note: The terms defined in this section and in the next section are underlined throughout the document.)

Agreement for Service: See "Application".

Application (or Agreement for Service or Contract): The agreement between the Department and the Customer under which service is taken. A written agreement for service must be completed and appropriate deposits made at North Little Rock Utilities Accounting. Service rendered by the Department is subject to the provisions of applicable City ordinances, rate schedules, and these Service Standards. The supplying and taking of such service shall constitute an Agreement For Service.

Authorities (having jurisdiction): The agency or agencies having jurisdiction - an incorporated city or town, county/parish, agency of the State Government or the Federal Government, the National Board of Fire Underwriters, or others as appropriate.

Department: North Little Rock Electric Department, its management, agents or employees.

Department Designated Underground Areas: Those portions of the Department's service area, defined by the Department, where overhead service is not available. This includes concentrations of commercial buildings with large loads that are not practical to serve with overhead facilities.

Department's Installation: In general, all the wires, devices, or apparatus on the Department's side of the point of delivery. Some equipment, such as devices installed for metering electric consumption or for demand side management, may belong to the Department, yet be installed on Customer's side of the point of delivery.

Department Pole: Includes Department owned poles and poles occupied by Department under joint use agreements.

Department Specifications: The particular details developed by the Department as its standard, which may include specifications of manufacturers and regulatory bodies having jurisdiction.

Conduit System: Any combination of duct, conduit, conduits, manholes, handholds, and vaults joined to form an integrated whole.

Contract: See "Application".

Customer: An individual, firm, partnership, association, corporation, organization, or governmental agency who is taking service as defined by regulatory authorities.

Customer's Installation: In general, all the wires, appliances, devices or apparatus of any kind or character on the Customer's side of the point of delivery except the meters, metering devices and facilities of the Department that may be located on the Customer's side of the point of delivery. Customer's wiring and electrical equipment within or on the premises shall be installed and maintained

in accordance with all effective building and wiring codes, and local laws and ordinances.

Demand: The kW or kVA , as shown or computed from the readings of the Department's demand meter installation, for the interval of the customer's greatest use between readings. (This is also known as maximum demand.)

Electric Service: See "Service".

Emergency Service: An additional, separate service, when required by regulatory authorities, for exit or emergency lighting, lift pumps, or to satisfy other safety regulations.

Inaccessible Area: Any area, as designated by Department, which would be difficult to enter for the purpose of conducting normal or emergency operations or maintenance.

Load: The amount of electric power delivered or required at any specified point or points on a system.

Mandatory Rules: The rules of the Service Standards which are characterized by the use of the word "shall."

Meter: A device or devices together with auxiliary equipment used for measuring any of the following: apparent, real, and reactive power and/or energy, which are supplied to any customer at a single point of delivery.

National Electric Code (NEC): The code adopted by the National Fire Protection Association, Inc. and American National Standards Institute as advisory information on the installation of electric facilities on private property. It is offered for the use in law and regulatory purposes in the interest of life and property protection.

National Electric Safety Code (NESC): The code adopted by the National Institute of Science and Technology in order to bring consistency and safety to the design, construction, operation and use of electric supply and communications installations.

Network Areas: Those designated portions of the Department's service area which include concentrations of commercial buildings, and which are typically supplied by a secondary network underground distribution system.

Point of Delivery: The physical location where the customer's service terminals or wires are joined to the Department's facilities or such other point specifically designated by written agreement.

Public Property: Property dedicated to public use such as streets, alleys, canals, roadways, and highways. This does not include schools, parks, public housing, gyms, playgrounds, public buildings, etc., which are considered customer premises.

Rigid Metal Conduit: A raceway specially constructed for the purpose of the pulling in or the withdrawing of wire or cable after the conduit is in place and made of metal pipe of standard weight and thickness permitting the cutting of standard threads.

Rigid Non-metallic Conduit: Polyvinyl chloride (PVC), schedule 40, tube for enclosure of electrical wires and cables which includes associated equipment such as adapters, cable enclosures, couplings, junction boxes, pull boxes, etc., as required for a complete enclosure system. (Schedule 40 PVC must be manufactured per NEMA TC-2 standard.)

Service (or Electric Service): The availability of electric power and energy to the Customer, regardless of whether any power and energy is actually used. Supplying of service by the Department consists of its maintaining at the point of delivery the approximate nominal voltage and frequency by means of facilities adequate for supplying the Customer's contracted load.

Service Conductors: The supply conductors that extend from the street main or from transformers to the service equipment of the premises supplied.

Service Drop: The overhead service conductors from the last pole or other aerial support to and including the splices, if any, connecting to the service-entrance conductors at the building or other structure.

Service Entrance: The Customer owned equipment for connecting to the service conductors or the service entrance conductors.

Service Entrance Conductors: (1) Overhead System: The service conductors between the terminals of the service equipment and a point usually outside the building, clear of building walls, where joined by tap or splice to the service drop.
(2) Underground System: The service conductors between the terminals of the service equipment and the point of connection to the service lateral.

Type of Service: The electrical or physical attributes of the service such as voltage, phase, frequency, transformer connection, number of wires, overhead or underground installation, etc.

Underground Service: The underground cable installation which connects the Department's distribution system to the Customer's service entrance conductors, or to the line side lugs of the meter enclosure.

1.5 Electrical Terms Used In Service Standards

Ampere: The unit of measurement of the rate of flow of electricity. It is the unit of current produced in a circuit by one volt acting through a resistance of one ohm.

Btu (British Thermal Unit): The quantity of heat required to raise the temperature of one pound of water one degree Fahrenheit. Capacity of air conditioning, heating, or heat content of fuel, etc. is measured in Btu. Btu/h is the rate of heat change - Btu per hour.

Current: The rate of flow of electricity usually measured in amperes. The Department supplies alternating current (AC) and will not supply direct current (DC).

Energy: The total work done as distinguished from the rate of doing work (power), usually measured in kilowatt-hours. Its amount depends upon the power and the time that the power is taken. For instance, a power rate of one kilowatt maintained for one hour is one kilowatt-hour of energy.

Hertz: Cycles per second. For example, the Department furnishes 60 hertz alternating current.

Horsepower: A unit of power, equal to a rate of 33,000 foot pounds of work per minute. Motors are generally rated in horsepower to indicate the mechanical power they are designed to produce. One horsepower equals 746 watts. Motors require 746 watts input, plus losses, for each horsepower output.

Kilovolt-ampere: (kVA) 1,000 volt amperes, the unit of apparent power, volts times amperes, which is comprised of both real and reactive power.

Kilowatt: (kW) 1,000 watts.

Kilowatt-hour: (kWh) A quantity of electrical energy - equal to 1000 watts used continuously for one hour, or 100 watts used continuously for ten hours, or some other equivalent.

Number of Phases: See "Phase".

Ohm: The unit of measurement of electrical resistance or impedance. It is that resistance through which one volt will produce a current of one ampere.

Phase (or Number of Phases): Term which designates characteristics of alternating current. It is a term used in the electric industry relating to the characteristics of the electrical service available or supplied at a given location or required for the operation of a given electrical device. Single phase is generally supplied for residences and small power customers and three phase is supplied for larger power customers.

Power: The time rate of doing work, generating, transferring, or using electric energy, usually expressed in kilowatts (kW).

Power Factor: The ratio of real power (kW) to apparent power (kVA) for any given load and time. Generally, power factor is expressed as a ratio and stated as a percentage.

Reactive-kilovolt-amperes: (kVAR) (rkVA) (kilovar) The product of the applied voltage and the magnetizing or charging current, divided by 1,000. Reactive-kilovolt-amperes do no work but must be supplied to magnetic equipment, such as motors. It is supplied by generators or capacitors.

Sag (Voltage sag): A decrease in RMS voltage at the power frequency for durations of 0.5 cycles to 1 minute. Typical values are 0.1 to 0.9 per unit.

Volt: A unit of electrical pressure or potential or electromotive force which if applied to a load of one ohm resistance will cause a current of one ampere to flow. Primary distribution and transmission voltages are usually designated in kilovolts (kV). One kilovolt is equal to 1,000 volts.

Voltage: See "volt".

Watt: An electrical unit of power. Electrical appliances and lamps are rated in watts to indicate their capacity or rate of using power for doing work. A 100 watt lamp used 10 hours will use one kilowatt-hour (kWh) of energy (1,000 watt-hours). Likewise a household iron rated at 1,000 watts will use one kilowatt-hour in one hour.

1.6 Enforcement

These service standards will be enforced through the denial of electric service, in addition to any other remedy that may be available at law or equity. Any violation of service standards that presents an imminent threat to the health or safety of any person or structure will result in the immediate disconnection of service, without notice or process, until such time that the violation is cured and validated.

SECTION 2 GENERAL INFORMATION

2.1 Safety

The safety of the general public, local communities, and Department staff is parapount and the most important factor in providing electric service. If the Department believes that danger to the public or to an individual exists, work shall stop and service may be disconnected until danger is remedied.

2.2 Code Requirements

The data contained herein is intended to conform with and be supplementary to recognized codes or requirements of authorized regulatory agencies. In all cases, where the regulatory rules effective in the community shall be more stringent than other recognized codes, or the requirements of regulatory agencies, the regulatory rules effective in the community involved shall govern, regardless of possible conflict in the expressed or implied meaning of the contents of this book. The contents are intended to be consistent with the principles of the NEC on the Customer's side of service and generally consistent with the NESC on the Department side. Compliance with the minimum requirements of the NEC will provide the Customer with what is considered a minimum standard for appropriate use of electricity, but not necessarily an efficient, or convenient use of electricity adequate for good service.

Any difference from the NEC is intended to provide better service than required by the minimum standards of the Code.

2.3 Inspections and Approvals

The wiring, electrical equipment, and appliances of the customer should be installed in accordance with the requirements of the latest NEC and of authorites having jurisdiction. The Electric Department does not inspect Customer premise wiring. Where inspection is required, including but not limited to service, weatherhead clearance, and meter can installation, is subject to approval of the NLR Code Enforcement Department or other authorities having jurisdiction before requesting connection to the Department’s service. The department can not connect tot the Customer’s installation until it has been inspected and approved by the authorities having jurisdiction.

The Department reserves the right to refuse connection to any new installation and/or disconnection from any existing service, should the Department learn that the wiring is unsafe or that is has not been approved.The authorities having jurisdiction also have the right to require the Department by written notification to discontinue service to an installation which has been found unsafe. The Department is not liable for any damages incurred when electrical service is discontinued under order of the authorities having jurisdiction. The Department accepts no responsibility for injury or damage to the Customer’s premises or to persons on the Customer’s premises resulting from defective wiring or equipment.

Before the Department will begin underground distribution construction work on any property, the General Contractor or the Owner of the property must sign the Department’s form verifying that the property is at final grade. Any changes to

grade that causes the Department to move any of its conductors or equipment after the Department begins or completes construction **WILL BE AT THE OWNER'S EXPENSE.**

2.4 Distance Requirements for Customer Structures

The construction of any structure near, under or over electrical facilities may cause a code and/or safety violation and be an encroachment on Utility right-of-way or easement. **Consult the Department concerning all clearences.**

Clearances of buildings, signs, and other structures to the Department's facilities shall meet or exceed the clearance requirements set forth in the NESC Article 234. The Customer shall be held responsible for the cost of relocating lines or structures or otherwise correcting any violations caused by the Customer's actions.

2.5 Attachments to Department Poles

The Department will provide, install, and maintain utility poles as required. Other than the Customer's service equipment, no other attachments (Customer-owned lighting, control equipment, antennas, basketball goals, bird houses, etc.) may be made to the utility pole. **Attachments may be made only with approval of the Department.** Unauthorized attachments may be removed upon discovery.

If an attachment to a Department utility pole is desired, an attachment agreement shall be signed and the agreement will set forth any changes associated with the attachment. All permitted attachments shall be made under the supervision and the satisfaction of the Department and shall comply with all authorities having jurisdiction and all applicable codes. Consult the Department for details.

2.6 Additional Department Documents and Standards

In addition to this document, the following documents supplement the Rules and Regulations laid out in this document. They are, but are not limited to:

- NLRED Line Extension Policy
- NLRED Customer Service Policies and Procedures
- NLRED Construction Standards for Residential Service Installation
- NLRED Service Pole and Lighting Charges
- NLRED New Customer Load Sheet
- NLRED Three Phase Padmount Transformer Pad Specifications

SECTION 3 SIGNING UP FOR ELECTRIC SERVICE

3.1 Application for Service

A Customer may apply for service by contacting:

North Little Rock Customer Service:
120 Main Street
North Little Rock, AR 72114.
501-975-8888

Separate from the Department's rate classifications, there are 3 basic classifications of services and each class has a different procedure for applying and receiving service. They are as follows:

1. Existing Residential Service
2. New Residential Service or Residential Overhead Service to Underground Conversion
3. New Commercial or Industrial Service or Service Retrofit

The following sections will **summarize** the services and each associated procedure. ***Please refer to the Department's Customer Service Policies and Procedures for the specific rules and guidelines for setting up an account and receiving service.***

(Note: No service can be provided until a written agreement for service has been signed and appropriated deposits made at North Little Rock Electric Customer Service)

3.2 Pre-Installation Information

The Department can expedite service connection and minimize cost to both the Customer and the Department if the Customer consults the Department before the design phase of the installation has begun. Architects, Builders, Contractors, Developers, Engineers, Electricians, or Owners are urged to consult the Department for information regarding the availability and type of service, and location of the service drop, service entrance, and meter.

The Department is not responsible for the cost of replacing any facilities that do not meet the requirements for service.

Connection to the Department's electric system is not available prior to approval of facilities. The approval process will include the review of a Final Plot of the property requiring service, review of a completed load sheet describing the service needed, acquisition of permits, and/or inspection by the authorities having jurisdiction. **The design of an electric service by the Department will not begin until all of the above items have been submitted and approved.**

3.3 Existing Residential Service

An existing residential service can be connected to an existing home if the following conditions are met:

1. The service has not been disconnected for a period of greater than 6 months prior to the application of service.
    a. In this case an electrical inspection will need to be performed

   b. Once the inspection has been completed and the service has been approved, the Customer can apply for service.
2. The service currently resides within the NLRED service territory
3. Previous occupants, tenants, and owners have cancelled and finalized their previous service to this location
4. The specific premise record has already been established in the NLR Electric Customer Information System Database

New customers applying for electric services must make application and sign a contract with North Little Rock Electric. The new customer must comply with all departmental policies with regard to electric service. The new customer must provide proper identification and other required information at the time of application and contract are requested or service will not be furnished.

North Little Rock Electric Customer Service
120 Main Street
North Little Rock, AR 72114
501-975-8888

Billing options may be setup at the time of the application.

3.4 New Residential Service or Residential Overhead Service to Underground Conversion

The Customer must furnish the following information to NLRED for any new service, or alterations to existing service, desired by the Customer:

1. Exact location(s) of premises, including street address if available, where service is desired.
2. Type of service (including service voltage), equipment rating, and amount of electrical load to be installed.
3. Total motor load (to include size(s) of largest motor(s), starting current(s), NEMA letter or code).
4. General characteristics of equipment to be driven by motors.
5. Date new electric service or alterations to existing service is needed.
6. Desired point of delivery or service entrance location.
7. Billing address and name. (Sketch may be required.)
8. Two forms of personal identification.

Upon receipt of the above information, the Department will advise the Customer as promptly as possible concerning installation or modification of the Customer's electric service.

It shall be the responsibility of the Customer to install and maintain the Customer's wiring and electrical equipment within or on the premises, in accordance with building and wiring codes, laws and local ordinances. The Department reserves the right to refuse to connect its service if the Customer's installation does not meet the requirements set out in this document as well as the Underground Residential Construction and Service Standards. The Underground Residential Construction and Service Standards can be found on

our website at www.nlrelectric.com or you can request a copy by email at nlred-engineering@nlr.ar.gov.

The Department will not be responsible, in any way, for any defect in the Customer's wiring, equipment, or for damages that may result from such defects. (Note: The Department may refuse service for other than technical reasons.)

The Department (or the Department's contractor) shall make the connection at the point of delivery. In special cases the Department may authorize the Customer's contractor to make this connection. This authorization must be obtained before any connections are made directly to the electric system. This requirement, however, does not preclude the Customer's contractor or electrician from installing meter bases, metering transformers, or other equipment when furnished by the Department.

3.5 New Commercial or Industrial Service or Service Retrofit

Because of the complexity of Commercial and Industrial service extensions, a dedicated customer service representative will be assigned to every new Customer to guide them through the application process. This representative can be reached at: (501) 975-8888.

The application process is as follows:

1. Completion and Submittal of a Commercial Customer Application
    a. The following items will need to be submitted along with this Application:
        i. Proof of Ownership or Lease Agreement of the Property
        ii. Business License
        iii. Federal ID number of the company or a Social Security Number of the company's owner
        iv. A Photo ID of the person requesting the service
        v. Deposit assessed upon submittal of a Load Sheet

    b. These items need to be hand delivered or mailed to:

        North Little Rock Electric Customer Serivce
        ATTN: Customer Service Manager
        120 Main Street
        P.O. Box 936
        North Little Rock, AR 72115-0936,
        501-975-8888

2. Completion and Submittal of a Load Sheet to the NLRED Engineering Department. To request a Load Sheet, please email nlred-engineering@nlr.ar.gov.

    a. The Following items will be based on this information:
        i. Customer Deposit
        ii. Customer Rate Schedule
        iii. Design of the Customer's Service

b. For these reasons, it is **PARAMOUNT** that the load sheet be filled out as soon as possible and as accurately as possible.

c. This sheet needs to be mailed or emailed to:

North Little Rock Electric
ATTN: Engieering
1400 West Maryland Ave
North Little Rock, AR 72120
nlred-engineering@nlr.ar.gov

d. Once this has been reviewed a NLRED Engineer may contact the customer directly to address any issues that may come up in regard to the load sheet and/or the location of the desired service.

3. A Department Engineer will be assigned to each service order and will remain on the order until service has been extended or constructed It shall be the responsibility of the Customer to install and maintain the Customer's wiring and electrical equipment within or on the premises, in accordance with building and wiring codes, laws and local ordinances which are in effect.

   The Department reserves the right to refuse to connect its service if the Customer's installation does not meet the requirements set out in this document. The Department will not be responsible, in any way, for any defect in the Customer's wiring, equipment, or for damages that may result from such defects. (Note: The Department may refuse service for other than technical reasons.)

   The Department (or the Department's contractor) shall make the connection at the point of delivery. In special cases the Department may authorize the Customer's contractor to make this connection. This authorization must be obtained before any connections are made directly to the electric system. This requirement, however, does not preclude the Customer's contractor or electrician from installing meter bases, metering transformers, or other equipment when furnished by the Department.

SECTION 4 INTERCONNECTION AND DISTRIBUTED GENERATION

4.1 Residential Generation (Less than 25 kW)

The Customer may permanently install a Solar PV array or other form of generation behind the meter at their residence or business. The Customer should contact the electric department before purchasing and installing the system so that any additional equipment needed to connect to the Department's system can be done safely. The Customer must comply with all of the requirements laid out in the Department's Net Metering Agreement.

An application for interconnection to the Department's system will be provided upon request. The Net Metering agreement shall be filled out and returned prior to the installation of the customer's interconnection equipment. Upon completion of the installation of Customer's generation equipment, an inspection by the City's Code Enforcement Officer is required before the Customer can connect to the Department's electric system.

Any generation that is in excess of the Customer's demand and flows back on to the Department's electric system, will be credited in the Customer's monthly bill. Any credit that has not been applied to the customers bill by December 31st at the end of each year will be lost and customer credit will start accruing again from zero on January 1st.

4.2 Commercial or Industrial Generation

4.2.1 Small Generation Facilities (Less than 300 kW)

For commercial and industrial customers, generation facilities up to 300 kW in size will be covered by the Department's Net Metering agreement. This is the same agreement described in section 4.1. Please contact the department for more information and a copy of the Net Metering will be provided.

4.2.2 Large Generation Facilities (More than 300 kW up to 10 MW)

For commercial and industrial customers, generation facilities more than 300 kW and up to 10 MW in size will be covered by the City of North Little Rock Ordinance No. 8524. The Distributed Generation Rates and Procedures are described in this Ordinance under Exhibit 'A'. **Please contact the Department for more details.**

4.3 Connection of Backup Generation

The Customer shall contact the electric department prior to permanently installing a backup generator. See section 14.8 of this document for details.

In the event of a storm or an extended outage, a customer may use a temporarily installed generator as long as electric service is out. It must be done in a safe manner that will not feed back into the Department's electric grid. Plugging a generator in directly to a breaker box or outlet are a few (but not all) examples of a dangerous connection that could potentially kill a Department employee. **Please contact the Department for more details.**

SECTION 5 TYPES OF SERVICE

5.1 General Characteristics

The electric service furnished by the Department is 60 hertz alternating current, single and three phase.

5.2 Generally Available Types of Service

The type of service (number of wires, phase, and voltage) furnished by the Department depends on two factors (1) the voltage available near the service location and (2) the type of service which in the Department's judgment can most economically be made available to serve the nature, size, and location of the Customer's requirements. The voltages and number of phases generally furnished are listed in Table 5.2-1 by nominal service voltages. However, a particular type of service may or may not be available at a given location. Therefore, during the Customer's design phase, the Department shall be consulted regarding the type of service desired.

Table 5.2-1. Generally Available Standard Transformations of Electric Service

	Types of Service	Typical Loads Served
1.	1 phase - 120/240 volts - 3 wire	Residential and other small loads from 25 kVA to 250 kVA
2.	3 phase delta - 120/240 volts - 4 wire	Loads with both single and three phase requirements not exceeding 150 kVA • Open delta - For small three phase loads • Closed delta - Single phase load shall be 20% or less of total for loads between 150 and 1,500 kVA
3.	3 phase wye - 120/208 volts - 4 wire	Three phase loads from 50 kVA to 1,000 kVA
4.	3 phase wye - 277/480 volts - 4 wire	Loads between 150 kVA and 3,750 kVA where individual motors are 50 hp or greater
5.	3 phase wye - 2400/4160 volts - 4 wire	Contact Department for minimum load requirements

Note: For specific information on voltage transformations and other delta services, contact the Department. Refer to Table 5.4-2 for allowable motor sizes for various voltages.

Table 4.2-1 does not include all types of service available. The Department also offers electric service at primary distribution voltages. Normally, the voltages offered at a given location are restricted to those that are already available. Contact the Department for further information on the availability of all distribution voltages not listed in Table 5.2-1.

5.3 Load Sheet

Upon completion of and application for service, new services for residential customers and all services for commercial and industrial customers will be required to fill out a load sheet that covers the following:

1. Exact location(s) of premises, including street address if available, where service is desired.

2. Type of service (including service voltage), equipment rating, and amount of electrical load to be installed.
3. Total motor load (to include size(s) of largest motor(s), starting current(s), NEMA letter or code).
4. General characteristics of equipment to be driven by motors.
5. Date new electric service or alterations to existing service is needed.
6. Desired point of delivery or service entrance location.

When the load sheet has been completed, a Department Engineering staff member will meet with the customer and design the service to best meet the needs of and be financially responsible to the customer and the city. All services will be designed based on the Customer's completed load sheet. **Without completion and submittal of this load sheet to the NLRED Engineering Department, SERVICE WILL NOT BE CONNECTED.** It is paramount that the load sheet be completed and submitted to the Department as soon as possible.

To request a Load Sheet, please email nlred-engineering@nlr.ar.gov.

5.4 Availability of Three Phase Service

It is the Department's policy to allow the Customer the widest selection of service types consistent with sound operation and with the type of service desired to best suit the electrical requirements. However, there are locations in the Department's service area where, for practical considerations, the selection must be limited. The Department has many areas in which three phase facilities are not available. In these areas, the Customer may be required to pay the incremental cost of providing three phase service. The cost of providing such facilities may be prohibitive in relation to the value of three phase service to the Customer. Therefore, the Customer should contact the Department to determine if any charges are associated with the desired service prior to making any decision concerning the purchase of electrical equipment.

5.5 Facilities for Highly Fluctuating or Special Loads

The Department normally provides facilities adequate to serve reasonably stable loads. Highly fluctuating loads such as welders, X-ray machines, and motors with unusual or frequent starting requirements, may cause the facilities normally provided to be inadequate. Highly fluctuating loads may interfere with other Customers' electric service. In some instances, the most practical solution to these problems may be the installation of additional facilities to serve the Customer. Should the Department install such additional facilities, the Customer will be required to pay for them.

5.6 Temporary Service

The Department provides many types and classes of temporary service which may be available at the location for construction work, traveling shows, etc. The Customer must provide adequate protective devices for all temporary services. Poles to be used for temporary service shall be treated. Overhead temporary service poles are typically set no more than 75 feet from the nearest Department pole. See Drawing S-1 for a typical structure for temporary service from an overhead source. See Drawing S-2 (bottom) for a typical structure for temporary service from an underground source. The temporary service pole location for

either overhead or underground service will be specified by the Department. Specific terms and conditions under which temporary service will be provided may be obtained from the Department.

5.7 Specialty Permanent Service

5.7.1 Services for Mobile Home Parks, Trailer Parks, and Individually Located Mobile Homes

Requirements for electrical service for mobile homes, mobile home parks and travel trailer parks differ from other types of service and must be given special consideration in each case. The Customer shall consult with the Department well in advance of any installation. For individually owned, permanently located mobile homes, see Drawing S-7 for a typical meter service installation from an overhead source and Drawing S-2 (top) for a typical meter service installation from an underground source. For mobile home parks or travel trailer parks, see Drawing S-7 or S-8 for overhead service and Drawing S-2 (top) for underground service.

5.7.2 Central Service Poles/Load Center Distribution Pole For A Farmstead

For farm and other Customers who have two or more points of utilization at contiguous locations and where it is more practicable to deliver service at a central service pole on the Customer's property than at a building, the Department will deliver service under the following conditions:

1. Central service pole will be installed, owned, and maintained by the Customer. Refer to Drawing S-8.
2. Service entrance (or meter loop) and fused switch or circuit breaker (all to be owned by the Customer) will be installed on central service pole by the Customer.
3. The Department will connect its service wires to the Customer's service terminals on the central pole, this point of connection being the point of delivery of service.
4. The wires extending from the central power pole to the Customer's buildings or points of utilization will be a part of the Customer's installation and will be installed and maintained by the Customer.
5. No foreign objects such as television masts, bird boxes, etc. will be allowed on the pole.

5.7.3 Apartment Building Service

Where apartment buildings are contemplated, the Department should be contacted before plans are drawn, in order that adequate service be made available to the prospective tenants.

5.7.4 Vertical Distribution System

The Department will not install, own or maintain a vertical distribution system in multi-story buildings.

5.7.5 Service to Marinas and Boat Docks

The Department will provide electric service to marinas and boat docks terminating at a location on land that will be designated by the

Department. The point will be located above the normal flood plain elevation. A disconnect switch must be installed at the point of delivery. With the exception of the meters, the Customer shall own, install, and maintain all facilities beginning at the point of delivery. Meters will be owned by the Department but may be installed near each boat slip. The Customer's facilities must meet all requirements in NEC Article 555 and any other referenced code.

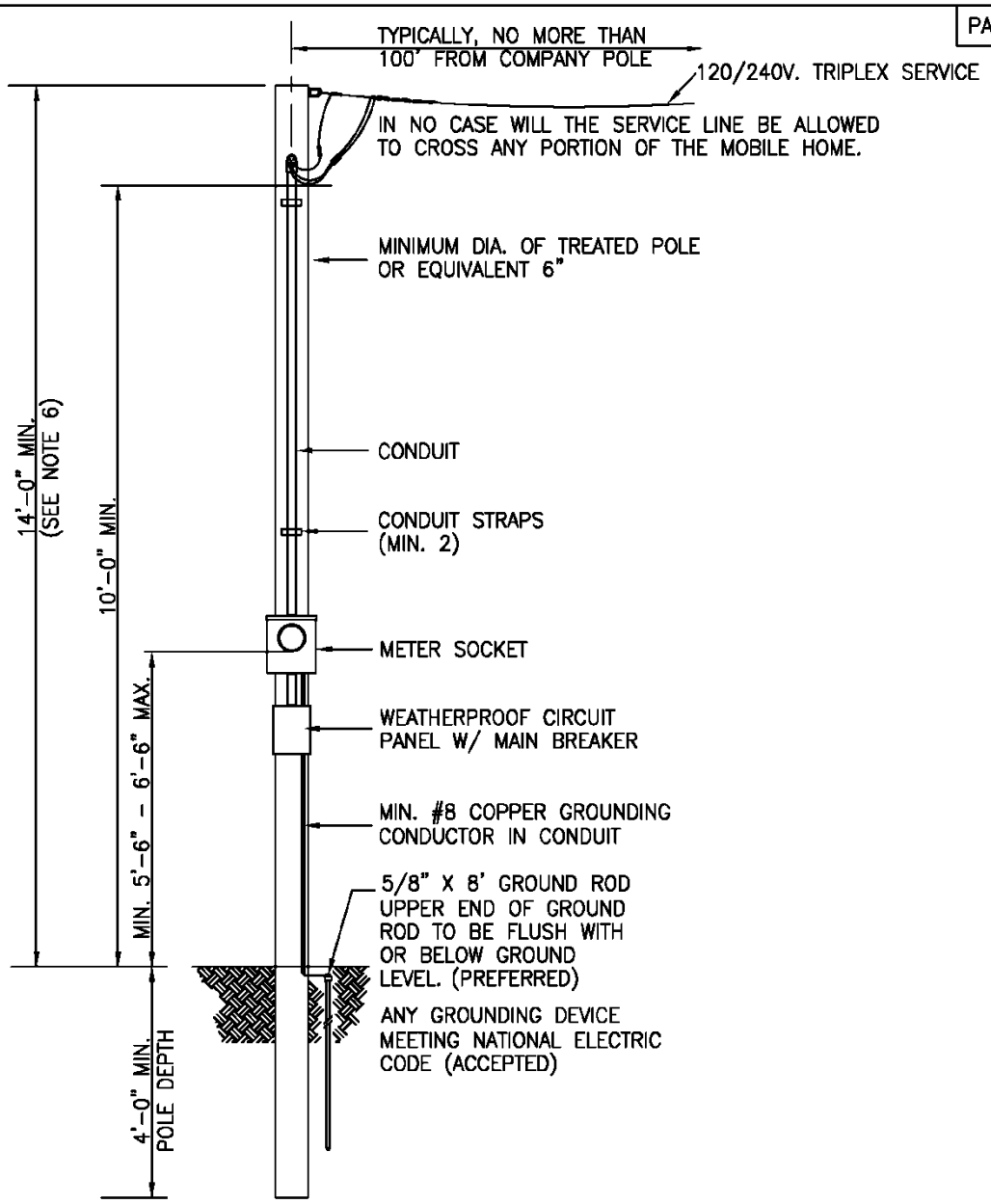

NOTES:
1. ALL NON-CURRENT CARRYING METALLIC PARTS TO BE EFFECTIVELY GROUNDED
2. N.L.R.E.D. TO SUPPLY OVERHEAD SERVICE, CONNECTORS, SERVICE DEADEND AND METER ONLY
3. ALL OTHER MATERIAL TO BE SUPPLIED BY AND INSTALLED BY CUSTOMER
4. ALL WORK TO BE IN ACCORDANCE WITH LATEST VERSION OF NATIONAL ELECTRIC CODE OR CITY OF N.L.R. ELECTRIC CODE OR CITY OF SHERWOOD ELECTRIC CODE. DEPENDING UPON LOCATION
5. ALL WORK TO BE INSPECTED BY CITY OF N.L.R. OR CITY OF SHERWOOD ELECTRICAL INSPECTOR
6. ADDITIONAL POLE HEIGHT MAY BE REQUIRED IF SERVICE CROSSES STREET, ALLEY OR DRIVEWAY TO MAINTAIN PROPER CLEARANCE PER N.E.C. CLEARANCES.

BORDER CADD FILE: NLR8511.dwg

NORTH LITTLE ROCK ELECTRIC CONSTRUCTION STANDARDS TYPICAL PERMANENT SERVICE TO A MOBILE HOME FROM AN OVERHEAD SOURCE	DATE: 10-27-98 SHT No.: 1	REVISION 1
	CONSTRUCTION STANDARD No.	S-7

CADD FILE: NLRS007

PAGE 2

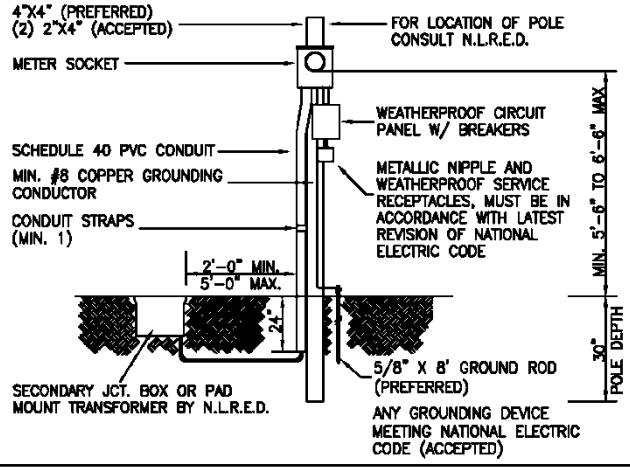

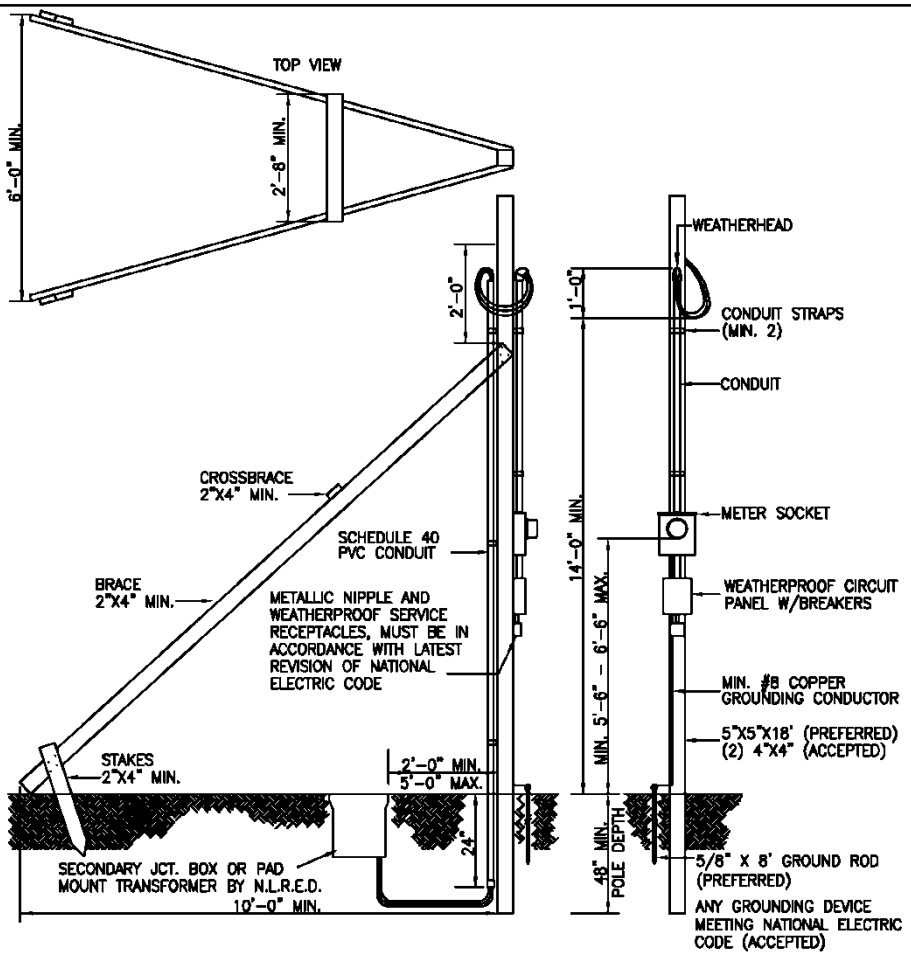

NOTES:
1. ALL NON-CURRENT CARRYING METALLIC PARTS TO BE EFFECTIVELY GROUNDED
2. ALL MATERIAL TO BE FURNISHED AND INSTALLED BY CUSTOMER UNLESS OTHERWISE NOTED
3. ALL WORK TO BE IN ACCORDANCE WITH LATEST VERSION OF NATIONAL ELECTRIC CODE OR CITY OF N.L.R. ELECTRIC CODE OR CITY OF SHERWOOD ELECTRIC CODE. DEPENDING UPON LOCATION
4. ALL WORK TO BE INSPECTED.

	NORTH LITTLE ROCK ELECTRIC CONSTRUCTION STANDARDS TYPICAL TEMPORARY SERVICE FROM AN UNDERGROUND SOURCE	DATE: 10-27-98 SHT No.: 1	REVISION 1
		CONSTRUCTION STANDARD No.	S-2

PAGE 1

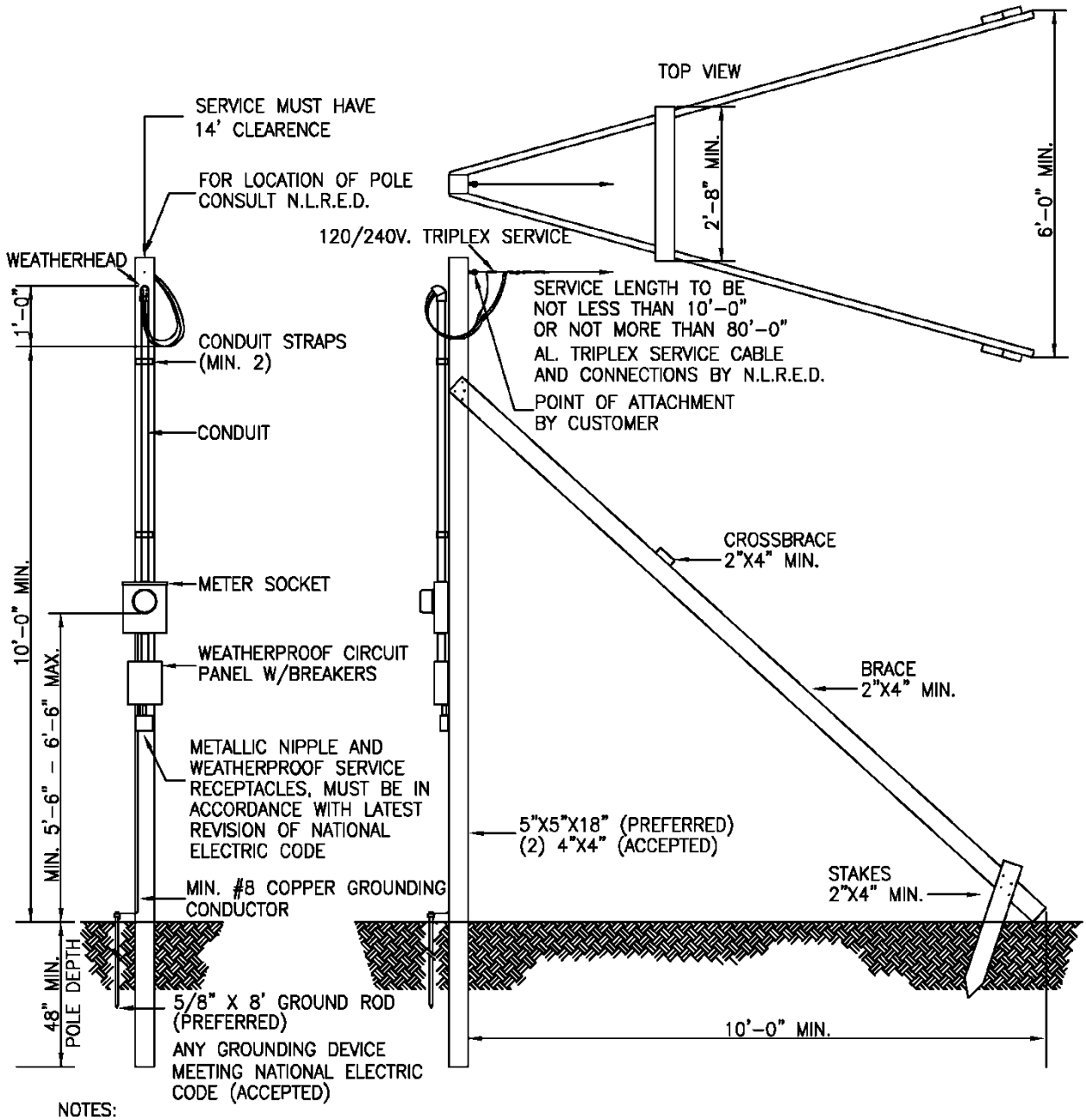

NOTES:

1. ALL NON-CURRENT CARRYING METALLIC PARTS TO BE EFFECTIVELY GROUNDED
2. N.L.R.E.D. TO SUPPLY OVERHEAD SERVICE, CONNECTORS, SERVICE DEADEND AND METER ONLY
3. ALL OTHER MATERIAL TO BE SUPPLIED BY AND INSTALLED BY CUSTOMER
4. ALL WORK TO BE IN ACCORDANCE WITH LATEST VERSION OF NATIONAL ELECTRIC CODE OR CITY OF N.L.R. ELECTRIC CODE OR CITY OF SHERWOOD ELECTRIC CODE. DEPENDING UPON LOCATION
5. ALL WORK TO BE INSPECTED.
6. ADDITIONAL POLE HEIGHT MAY BE REQUIRED IF SERVICE CROSSES STREET, ALLEY OR DRIVEWAY TO MAINTAIN PROPER CLEARANCE PER N.E.C. CLEARANCES.

BORDER CADD FILE: NLR8511.dwg

	NORTH LITTLE ROCK ELECTRIC CONSTRUCTION STANDARDS TYPICAL TEMPORARY O.H. SERVICE METER INSTALLATION 120/240 VOLTS SINGLE PHASE	DATE: 10-27-98 SHT No.: 1	REVISION 1
		CONSTRUCTION STANDARD No.	S-1

CADD FILE: NLRS001

SECTION 6 SERVICES INTRODUCTION

6.1 General Comments

The Department will designate the location of the point of delivery or attachment of the service to the Customer's premises, taking into consideration the shortest distance to the Department's distribution facilities, crossing adjacent property of others, and location of meter for reading and servicing. The cost to the Customer for electric facilities will be minimized by the Customer contacting the Department for the point of delivery location during the Customer's project design phase. The Customer will be responsible for additional costs if a point of delivery other than the most economical is desired. The service may be installed overhead or underground depending on the Customer's preference and/or the facilities available in the area of the premises to be served.

All electric service required on the Customer's premises shall be delivered and metered by the Department at one point of delivery, except where a second separated service is required for exit or emergency lighting, fire pumps, or other safety regulations.

The Department's service will not be energized until the Customer's installation has been inspected and approved by the authorities having jurisdiction and all obligations due the Department have been satisfied.

Service for loads over 200 amperes may require individual attention. All new residential subdivisions developed will be served by underground distribution systems and secondary services unless otherwise specified by the Department. Also, all services that require more than 320 amps shall be underground services.

Consult the Department for information and specifications.

6.2 Easement for Service Facilities

The property owner(s) will grant, at no cost to the Department, easements suitable to the Department for the installation of the Department's facilities. A written easement permit document will be provided by the Department for execution by the property owner(s). The Department may require the Customer's assistance in obtaining easement(s) from adjacent property owner(s).

The Department shall also be provided, at no cost, written agreements covering proper easements:

1. Where primary facilities are installed on private property;
2. Whenever secondary facilities are to be installed on the Customer's premises that could serve one or more Customers on adjoining properties;
3. Where facilities cross over or under private property, such as, cross country, adjoining highways and roadways, within subdivisions, etc.; and
4. Where facilities are constructed within the confines of a highway or roadway that exists by virtue of servitude only.

All parties, i.e., in fee land owner(s), grantee(s), must give their consent.

6.3 Initial Clearing of Property for Right-of-Way

The Customer requesting a new service is responsible for preparing the initial right-of-way. The Customer shall perform the clearing as instructed by the Department on all property owned by the Customer. In areas where side trimming is needed after the Customer completes the ground work, the Department will trim only those trees the Customer cannot trim. The Customer will be responsible for removal of all debris. At the Department's option, the Department may clear the right-of-way and be reimbursed by the Customer.

In the case of underground facilities, the easement shall be brought to final grade prior to any installation of facilities by the Department. After installation of the Department's facilities, the Customer shall be responsible for costs associated with raising, lowering or relocating facilities due to changes in the surface grade.

6.4 Relocation of Department's Facilities

The Department will move or relocate the Department's facilities where practical to do so at the request of the Customer. The Customer will be required to provide consideration in exchange for the relocation. This cost will include materials, labor, and overhead costs and will be invoiced on completion of the relocation.

SECTION 7 OVERHEAD SERVICE

7.1 General Comments

The Department will specify a satisfactory location for the service drop attachment. Ordinarily, only one type of service and one service drop is permitted to the Customer's premises. Connection to the Customer's service entrance conductors will normally be made by the Department. Connection shall be made only after the Customer's wiring has passed inspection and has been approved by the authorities having jurisdiction. From the point where the Department's overhead service drop terminates, the Customer shall install service entrance wires to the meter socket and service entrance switch or circuit breaker panel in accordance with the requirements of the NEC, NESC, or other authorities having jurisdiction.

Not less than three feet of each conductor of the service entrance cable or wires shall be left extending beyond the weather head for connection to Department's service drop. For polyphase services, like phases shall be appropriately identified and marked. All neutrals shall be appropriately marked. The connection(s) will be made by the Department. Refer to Drawing S-3 for overhead installations.

It is the customer's responsibility to ensure that like phases are appropriately marked and connected together on the load side of the metering equipment. It is also the customer’s responsibility to install and maintain the meter can and the point of the attachment. The customer owns this equipment.

All conditions covered in Section 6 must also be met in addition to the conditions specified in this section.

7.2 Ownership of Facilities

The point of attachment in the customer’s weatherhead shall be the demarcation point between facilities owned by the Department and facilities owned by the Customer. The only exception to this rule is the meter that is installed on the Customer side of the point of attachment. The meter is owned and serviced by the Department even though it is attached in the meter can that the customer owns. See Drawing S-3.

7.3 Point of Attachment

The point of attachment of the Department's service drop to the Customer's premises shall be of sufficient height to permit the Department's service drop to conform to the requirements of the National Electrical Safety Code and any other controlling codes, ordinances, or orders of authorities having jurisdiction. The Customer may be required to install a service extension or a metal riser pole. When a service extension or metal riser extends above the roof, the point of attachment and clearances above the roof shall conform with the National Electrical Code or other controlling codes. For temporary overhead service refer to Section 5.6, Temporary Service, and DrawingS-2 (bottom). For permanent service, see Drawing S-3.

7.4 Clearances

The point of attachment of the service drop (150 volts line to ground or less) shall be high enough to allow for the service drop conductors to have the following minimum clearances:

1. 14 feet over areas of pedestrian traffic, residential driveways, and commercial areas not subject to truck traffic.
2. 18 feet over roads, streets, alleys, non-residential driveways, and other areas subject to truck traffic.

Consult the Department concerning all clearances.

7.5 Length of Service Drop

The unsupported length of the service drop from the Department's facilities to the first point of attachment will in no case be more than 125 feet. The unsupported length of a service drop may be required to be significantly less than 125 feet, depending on wire sizes, other significant factors and conditions at the Customer's property. Exceptions to this rule can only be made by the Department in the case of difficult terrain or other atypical impediments. Consult the Department for length limitations based on wire size and other factors.

7.6 Method of Attachment

The service drop will be attached to the building or approved extension by suitable means which will be supplied by the Customer. Refer to Drawing. The Customer shall provide suitable reinforcement or backing for secure mounting of attachment fittings and adequate anchorage of the service drop as well as spacing, (according to dimensions which the Department will supply), for mounting the service drop attachment fittings.

7.7 Extension of Overhead Distribution Facilities

A Customer's service location may require the Department to incur expense greater than normally allowed in providing the service. Extension of primary overhead distribution lines, relocation of Department facilities or removal of Department facilities are examples of situations which occur. When such a situation exists, the Department may require payment from the Customer in addition to the amount normally charged. For complete details, consult the Department's policy for extension of overhead electric distribution facilities.

7.8 480 Volt Metered Service

A 480 volt service with a self-contained meter shall have a non-fused disconnect switch on the line side of the meter. Refer to Section 12.8.1, Disconnecting Means For Services Less Than 600 Volts.

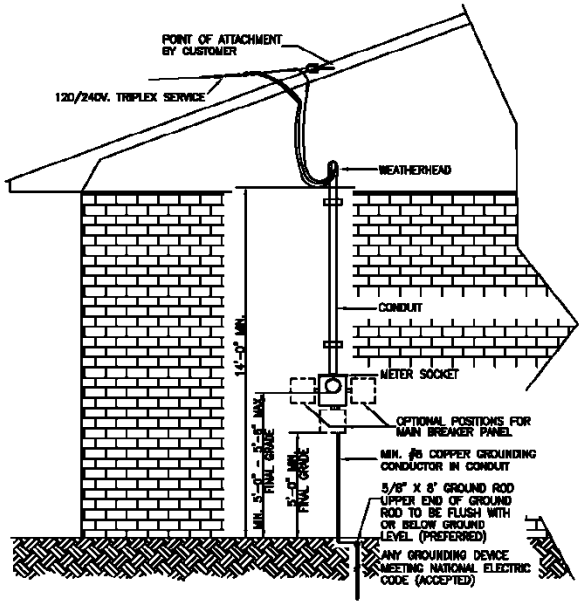

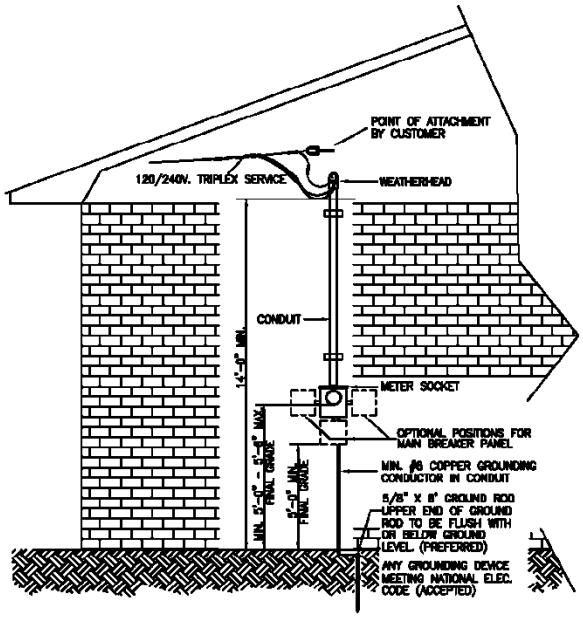

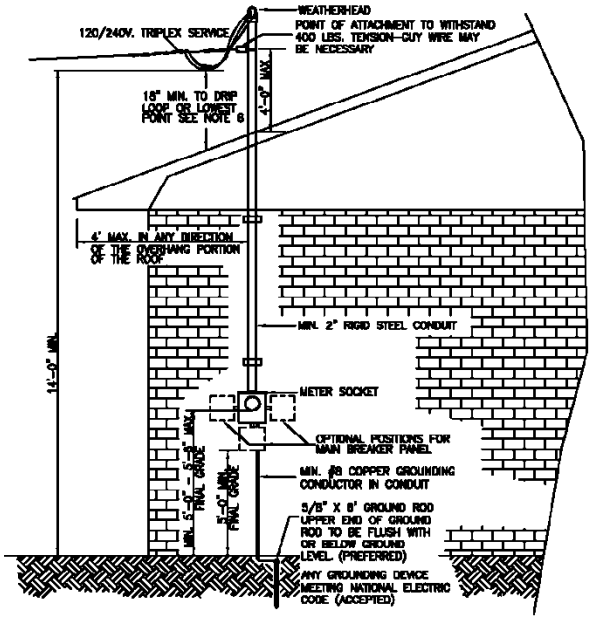

NOTES:
1. ALL NON-CURRENT CARRYING METALLIC PARTS TO BE EFFECTIVELY GROUNDED
2. N.L.R.E.D. TO SUPPLY OVERHEAD SERVICE, CONNECTORS, SERVICE DEADEND AND METER ONLY
3. ALL OTHER MATERIAL TO BE SUPPLIED BY AND INSTALLED BY CUSTOMER
4. ALL WORK TO BE IN ACCORDANCE WITH LATEST VERSION OF NATIONAL ELECTRIC CODE OR CITY OF N.L.R. ELECTRIC CODE OR CITY OF SHERWOOD ELECTRIC CODE. DEPENDING UPON LOCATION
5. ALL WORK TO BE INSPECTED BY CITY OF N.L.R. OR CITY OF SHERWOOD ELECTRICAL INSPECTOR
6. POINT OF ATTACHEMENT TO WITHSTAND 400 LBS. TENSION

	NORTH LITTLE ROCK ELECTRIC CONSTRUCTION STANDARDS TYPICAL OVERHEAD SERVICE METER INSTALLATION 120/240 VOLTS SINGLE PHASE	DATE: 10-27-98 SHT No.: 1	REVISION 1
		CONSTRUCTION STANDARD No.	S-3

SECTION 8 UNDERGROUND SERVICE AND INSTALLATIONS

8.1 General Comments

Economic, physical and technical considerations normally dictate the use of overhead distribution facilities in the Department's operating area. In some circumstances, however, it is feasible and practicable for the Department to install portions of its distribution facilities underground. In other circumstances, the value to the property owner(s) of having the electric distribution and service facilities installed underground outweighs the added costs to install them. Therefore, circumstances may exist where the Customer may either elect or be required to take electric service through an underground service from an overhead or underground distribution system. In such cases, the Customer will be required to pay the additional cost, if any, in excess of the cost of an overhead system. In all cases where the Customer desires service from underground conductors, the Customer should consult the Department.

All new residential subdivisions developed will be served by underground distribution systems and secondary services unless otherwise specified by the Department. Also, all services that require more than 320 amps shall be underground services.

Single phase underground service will normally be 120/240 volts, three wire. The service from three phase pad mount or vault type transformers should be restricted to 208Y/120 or 480Y/277 volts, four wire. The Department's typical installation includes a pad mount transformer. Occasionally, other type transformers may be required. Consult the Department for details.

All conditions covered in Section 6 must also be met in addition to the conditions specified in this section.

8.2 Ownership of Facilities - Residential

The line side terminals where the Department’s wire is attached in the Customer’s metercan shall be the demarcation point between facilities owned by the Department and facilities owned by the Customer. The exception to this rule is the meter that is installed on the Customer side of the point of attachment and the conduit run from the utility pole to the metercan. The meter is owned and serviced by the Department even though it is attached in the meter can that the customer owns. The customer owns the conduit that runs from the utility pole to the metercan. See Drawing.

8.3 Ownership of Facilities – Commercial and Industrial

The load side terminals where the Customer’s wire is attached in the Department’s transformer shall be the demarcation point between facilities owned by the Department and facilities owned by the Customer. The exception to this rule is the meter that is installed on the Customer side of the demarcation point. The meter is owned and serviced by the Department even though it is attached in the meter can that the customer owns. See Drawing.

8.4 Agreement for Underground Service

The Customer may be required to execute an agreement which will set forth ownership and maintenance responsibilities, characteristics of the services covered, and any financial arrangements. An agreement may also be required with the individual Customer in order for the Department to provide underground service.

8.5 Specification Requirements

All facilities which the Department will own and operate shall be installed either by the Department or to the Department's specifications. The Department will not accept ownership of any underground facilities that do not meet the Department's specifications.

8.6 Requirements for Obtaining Underground Residential Service

8.6.1 General Comments

Underground residential service may be available from either overhead or underground facilities. The Customer shall provide, install, own and maintain the conduit from the meter socket down to a point thirty inches (30") below ground in accordance with Department specifications. (Note: This will require the use of a 36" bend.) See Drawing. Installation of the conduit around or through the footings shall conform to the requirements of authorities having jurisdiction. Consult the Department for information if conflict arises.

Should the Customer request underground service with a complete conduit system, the Customer shall provide a continuous run of conduit with a minimum size of 2" for 200 ampere service. See Drawing. Drawing shows conduit encased in concrete when such an installation is required. Consult the Department for details. The Department shall furnish, install and maintain the underground conductors in the conduit system. Refer to Section 8.9, Conduit, for more information.

MAIN SIZE	CONDUIT SIZE	SCHEDULE
200 amp	2 inch	40
320 amp	3 inch	40
400 amp	4 inch	40

8.6.2 Underground Electric Service for New Residential Subdivisions

Contact the Department at the earliest date possible so that:

1. The Department can plan the distribution system, design any applicable street lighting feed points or other lighting systems, determine the meter and service locations, and
2. Agreement can be reached on the manner of paying the additional cost, if any, in excess of the cost of any overhead system.

NOTE: The Department must have a 10' right-of-way and access along public streets in order to build and maintain street lights, control equipment, and conductors for street light circuits. In the case of private roads, for example roads in gated communities, street lights are the responsibility of the property owner(s) and/or the communities that they

are installed in. The Department cannot build or maintain privately owned street lights.

Underground facilities will be installed on the front lot easement with pad mount transformers. Easements for underground facilities shall be described on Department's right-of-way agreement forms and furnished to the Department as outlined by Department policy and/or on dedicated recorded plat. Refer to Section 6.2, Right-of-Way for Service Facilities.

Customers within an underground subdivision adjacent to an overhead distribution system may be served with an underground service from the overhead system.

8.6.3 Underground Service From An Underground Distribution System

A residential Customer may elect or be required to take electric service through an underground service from an underground distribution system and will be required to pay in some manner the additional cost, if any, in excess of the cost of an overhead system.

8.6.4 Underground Service From Overhead Distribution System

The Customer may elect or be required to take service through an underground service from an overhead distribution system and will be required to pay in some manner the additional cost, if any, in excess of the cost of an overhead service.

New customers in new residential areas taking underground service will be required to pay the additional cost, if any, in excess of the cost of an overhead service. The cost of the underground service is the installed cost of the cable plus conduits, and handholes, if required. In general, a handhole is not required when a customer is taking underground service from an overhead system. Handholes are normally required when two or more customers are taking underground service from the same pole in an overhead distribution system. Two or more conduits may be installed in accordance with the limitations in the Section 8.9.2.1, Conduit Installation General Comments, with the approval of the Engineering Design Supervisor. The conduit for the pole shall be provided by the Customer and installed by the Department. The elbow at the base of the pole and adjacent to the house shall be provided and installed by the Customer. Refer to Section 8.9.2.2, Conduits Used In Residential Underground Installations. The cost of the handhole and riser installation may be divided among the Customers to be served or paid for by the Developer.

8.6.5 Underground Service Replacing Existing Overhead Service

An existing Customer served with an overhead service may request the removal of the overhead service and installation of a new underground service. The Customer is responsible for paying the total installed cost of the new underground service. Consult the Department for information and specifications.

8.7 Requirements for Commercial, Industrial, and Other Non-Residential Underground Service

8.7.1 Underground Service From Underground Systems

Underground secondary service from an underground distribution system may be provided to non-residential Customers. In general, the Customer will be required to install, own and maintain all conduit and conductors on the load side of the transformer from which service is being provided. Unless approved by the Department, these conductors must be copper and must not exceed 500 MCM in size. It is the responsibility of the Customer to install, own, and maintain the transformer pad or vault. This includes both single and multi-meter installations. See Drawing.

Any underground primary conductors required to serve the Customer will be owned by the Department. The Customer shall pay the difference between the cost of the Department's underground facilities and the cost of the Department's overhead facilities, if any, to serve the load. Refer to Section 8.9.2.3, Conduit Used In Commercial, Industrial, and Other Non-Residential Underground Installations, to Section 8.10.3, Conductors Used in Underground Non-Residential Installations, and to Section 8.13, Transformers Used In Underground Installations. Consult the Department for additional information, specifications, and contract forms for underground installations.

8.7.2 Underground Secondary Service From Overhead Systems

Underground secondary service from an overhead distribution system may be provided to non-residential Customers. In general, the Customer shall install, own and maintain the conduit and conductor system beginning at the secondary terminals of the transformer. The Department will install any Customer owned conduits and conductors to be attached to its poles. Replacement of Customer owned facilities on Department owned poles shall be at the Customer's expense. Refer to Section 8.9, Conduit and Section 8.10.3, Conductors Used in Underground Non-Residential Installations. Consult the Department for additional information, specifications, and contract forms for underground installations.

8.8 Underground Electric Service for Mobile Home Parks

The Department will provide underground electric service to approved Mobile Home Parks. The Customer shall pay the difference between the overhead and the underground systems. Refer to Drawing for typical layout for underground served Mobile Home Park. (Approved Mobile Home Park shall mean one that is permanent, rather than temporary, and must have permanent central water and sewage systems.)

Service to individual mobile homes will be made by individually installed meter pedestals. The Customer shall supply the pedestal. Consult the Department for information.

The Department may supply service to a Customer owned street lighting system or supply lighting under the appropriate lighting rate where applicable.

8.9 Conduit

8.9.1 General Comments

The conduit may be rigid/ intermediate metal steel, rigid aluminum, or Schedule 40 PVC in appropriate applications. All conduits shall be of such size and type to meet the requirements of the Department and the Department specifications for the selected cable to serve the Customer. The Customer's anticipated future load requirements should also be considered when sizing cable and conduit to serve the Customer's present requirements.

8.9.2 Installation of Conduit

8.9.2.1 General Comments

All conduit must be installed according to Department requirements. Normally, conduits on a Department owned pole will be limited to one per customer. More than one conduit per customer may be allowed in certain circumstances, with prior Department approval. A maximum of two conduits may be attached to a Department owned pole if the sum of the two conduit sizes does not exceed ten inches. A maximum of three conduits may be attached if the sum of conduit sizes does not exceed seven and one half inches. Customers requesting more than the allowed number of conduits may be required to provide a separate support structure for the conduits and a suitable attachment point for the Department owned overhead service conductors. When more than one conduit is allowed, they shall be installed adjacent to each other, and not cover more than one quarter of the pole circumference.

Due to the quality of the soil in some portions of the NLRED service area, concrete around the conduit may be required. If concrete encased conduit bends are required at the base of the pole, the concrete must be formed to prevent its touching the pole and a fibrous separator is required between the pole and the concrete.

8.9.2.2 Conduits Used In Residential Underground Installations

Services installed in conduits for residential customers shall conform to Drawing S-5. The Customer shall install the conduit to the base of the pole. The conduit shall be installed such that it has no more than two 90 degree bends, including riser bends, (riser bends shall be 36 inches in radius), . In all cases where the run is of a length greater than 100 feet, a pull box shall be installed by the Customer as advised by the Department. In no case shall the conduit run exceed 100 feet without the prior approval of the Department. The pull box shall be of a design that conforms to Department specifications.

The Customer shall supply the conduit riser in accordance with Department specifications. The Department will install the riser

on the pole. The Department will pull the conductors in the conduit system. Once installed, the Customer will own all the conductors and the conduit up to the elbow at the service pole (in the case of a riser) or to the elbow entering the padmount transformer that is serving their property.

When two or more services originate from one Department pole having overhead facilities, means of accommodating multiple services may be required by the Department.

8.9.2.3 Conduit Used In Commercial, Industrial, and Other Non-Residential Underground Installations

The proposed load, cable sizes and conduit sizes should be given consideration when determining the pulls and lengths of conduit run. The number, design and location of pull boxes and total length of conduit runs to be installed shall be specified by the Department. If pull boxes are required, they shall be of sufficient strength, as approved by the Department, to support all expected loads that may be imposed on the structure, including local traffic. All spare conduits, if necessary, will conform to the requirements set forth in Section 8.9.4, Spare Conduits. See Drawing (we don't have a drawing for this) for a typical primary service to a single pad mount transformer serving commercial or industrial Customers. In general, all service wire and conduit is owned by the commercial, industrial, or other non-residential customer. Table 8.9-3 contains a recommended conduit guide for approved conductor sizes.

Table 8.10-3: Typical Underground Primary and Secondary Conductor and Conduit Guide

Conductor Size	Number of Cables	Recommended Conduit Size*	Maximum Pulling Length	Elbow Radius
#1/0 AL - (15 kV)	1	2"	300'	36"
#1/0 Cu - (15 kV)	1	2"	300'	36"
#1/0 Cu - (15 kV)	3	4"	300'	36"
750 AL - (15 kV)	3	5"	300'	36"
Secondary Conductors				
#1/0 AL Triplex	1	2"	100'	36"
#4/0 AL Triplex	1	2"	100'	36"
#350 AL Triplex	1	3"	100'	36"

*****The recommended conduit size conforms to the Department standards for conduit used on the Department system. Consult the Department during the design process to ensure that the proposed conduit system meets Department requirements.

8.9.3 Types of Conduit

8.9.3.1 General Comments

All conduits shall be PVC, rigid/intermediate metal steel, rigid aluminum, and/or rigid nonmetallic conduit with a U. L. label. Local Building Codes may be restrictive in the type(s) of conduit permitted. Consult authorities having jurisdiction before choosing conduit material.

8.9.3.2 Rigid/Intermediate Metal Conduits

Rigid intermediate metal steel and rigid aluminum conduits (with a U. L. label) may be used. Rigid aluminum conduit (with a U. L. label) can be used above grade only. In certain cases, when steel conduit is used below final grade, it must be completely encased in a minimum of 4" of concrete according to Drawing S-9 or wrapped with a material approved by the Department to provide corrosion protection.

8.9.3.3 Rigid Nonmetallic Conduits

Rigid Polyvinyl Chloride (PVC), Schedule 40, (with a U. L. label), may be used as a conduit riser, where building codes permit, under the meter enclosure, and as primary, secondary, and service risers on distribution poles. Rigid nonmetallic conduits may be used in inaccessible areas and below final earth grade. Generally, nonmetallic conduit installed below grade must be at least Schedule 40 PVC (with a U. L. label). In certain cases, concrete encasement may be required according to Drawing S-9.

8.9.3.4 Conduit Fittings

Conduit fittings to join the continuous lengths of conduits and to join the continuous lengths to bends of the same material shall be of the same material as the conduits and shall be U. L. approved and meet Department specifications. Fittings to join rigid nonmetallic conduit to rigid metal or intermediate metal conduit at transitions such as from below grade to above grade shall be U. L. approved and meet Department specifications.

8.9.4 Spare Conduits

In some cases, the Department may recommend the installation of spare conduits. Spare conduits will conform to all conduit requirements as set forth in these Service Standards.

8.10 Conductors

8.10.1 General Comments

The Department will generally own and operate all conductors on the Department side of the point of delivery. If the Department's facilities do not exist to serve the Customer's load, the Customer shall be required to pay for the difference between the cost to extend the line as an overhead distribution facility and the actual cost to install underground facilities.

Specific requirements are defined in the Department's line extension policy. Consult the Department for details.

8.10.2 Conductors Used in Underground Residential Installations

Normally conductors installed for permanent service to single residences shall be 3/0 aluminum. Consult the Department should some other size conductors be desired. Installations using conduits shall conform to Section 8.9.2.2, Conduits Used In Residential Underground Installations.

8.10.3 Conductors Used in Underground Non-Residential Installations

Commercial, industrial, and other non-residential Customers will install, own, and maintain all secondary conductors starting at the secondary side of the transformer. The conductors shall be copper and shall be no larger than 500 MCM in size. Normally, a maximum of eight conductors per phase per transformer will be permitted. Bus duct may be required for loads which exceed eight conductors per phase. The Department will make all secondary connections.

8.11 Termination of Conductors

8.11.1 General Comments

The term "terminals" refers to NEMA flat pads. They shall be aluminum bolted terminals on aluminum conductor and shall be either bolted aluminum or bolted flow tin plated copper terminals on copper conductor. The secondary connectors shall be provided by the Department. When the Customer makes connections of terminals to terminals, they must use the necessary bolt assemblies that meet Department specifications. Two hole NEMA terminals are required for conductors up to and including 1000 kCM and must fit side by side on a four hole NEMA terminal. Four hole NEMA terminals are required for all conductors larger than 1000 kCM. All terminals must be installed according to Department specifications. Connectors provided in Department approved meter enclosures may be bolted type suitable for bolting both aluminum and copper conductors.

8.11.2 Termination in Pad Mount Transformers

The Department shall furnish terminals for Customer installed and owned secondary conductors. Terminals must conform to Department specifications as outlined in Section 8.11.1, General Comments, and must be installed according to Department specifications. The Department shall bolt all terminals to the connectors of the transformer. The phasing and proper conductor length will be the responsibility of the Customer regardless of who installs the terminals or bolts the terminals to the transformer connectors.

8.12 Metering for Underground Service

Generally, the meter installation shall be located outside of a building or structure. Refer to Section 11.5, Location of Meter Installations. Disconnect switches or a main breaker panel shall be mounted to the side of the meter enclosure. Prior approval must be obtained from the Department for the installation of any service equipment directly below the meter enclosures.

If a single metering installation is to be used in connection with a three phase pad mount transformer installation, the meter shall be installed on unistrut supports next to and not in the transformer pad. The metering can shall not be attached directly to the transformer. Installing the meter can on the building is allowable as long as the meter can is within 25' of the transformer.

Special metering options may be available with approval of the Department. The Customer shall bear the additional cost made necessary by the special metering options.

8.13 Transformers Used in Underground Installations

8.13.1 General Comments

The Department will generally own and operate all transformers on the Department side of the point of delivery. Pad mount transformers shall be installed in accordance with Department specifications. Vaults, enclosures, etc., when used, will be at Customer's expense and shall conform to Department specifications. See Section 10, Transformers Vaults and Substations. Consult Department for specific details.

8.13.2 Transformer Pads or Slabs

Transformer pads or slabs shall be provided by the Customer, and will conform to Department specifications. The Department will specify the type of supporting foundation that is needed for the transformer installation when the pad or slab is owned and/or installed by the Department.

The specifications to the transformer pad will be provided to the Customer upon completion and submission of the Customer's load sheet to the Department. Please consult the Department for further details.

In cases where the primary system is three phase and radially fed, a minimum of one spare elbow shall be installed with the primary conduit in the transformer pad or slab when a complete spare conduit system is not provided.

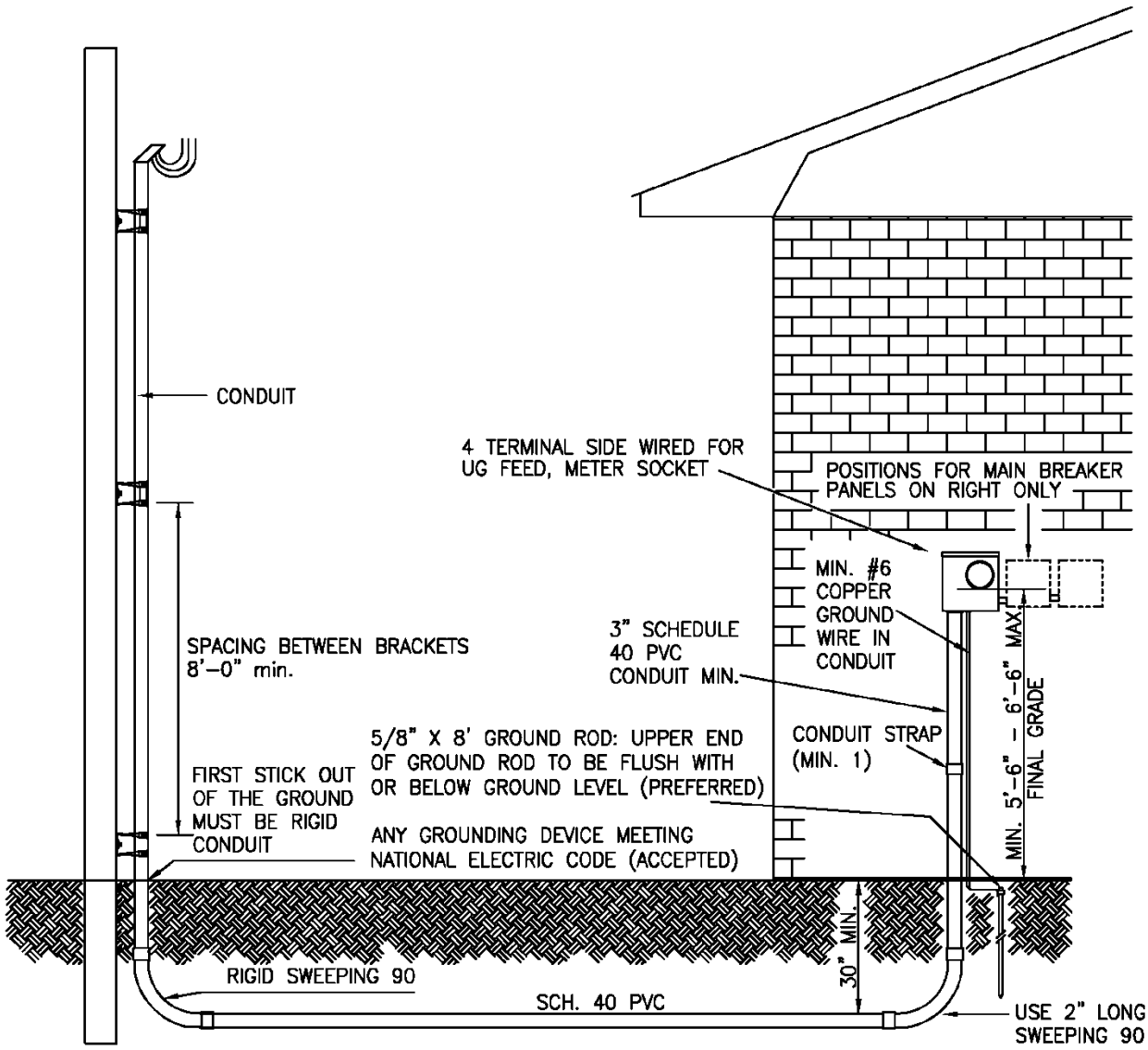

NOTES:

1. SERVICE TO BE MOUNTED ON SIDE OF HOUSE.
2. ALL NON-CURRENT CARRYING METALLIC PARTS TO BE EFFECTIVELY GROUNDED.
3. CUSTOMER TO PROVIDE AND INSTALL ALL CONDUIT AND PULL STRING TO N.L.R.E.D. SERVICE POLE
4. IF BUILDER'S PLANS CALL FOR A DECK OR PATIO, ELECTRICIAN TO EXTEND CONDUIT BEYOND EDGE OF SLAB OR DECK.
5. N.L.R.E.D. TO INSTALL UNDERGROUND SERVICE.
6. SERVICE TRENCH TO BE INSPECTED BY N.L.R.E.D. BEFORE BACK FILLING.
7. CONDUIT SIZE MIN. 2" FOR 200 AMP AND 3" FOR 320 AMP
8. ALL WORK TO BE IN ACCORDANCE WITH LATEST VERSION OF NATIONAL ELECTRIC CODE OR CITY OF N.L.R. ELECTRIC CODE OR CITY OF SHERWOOD ELECTRIC CODE. DEPENDING UPON LOCATION

NLR	NORTH LITTLE ROCK ELECTRIC CONSTRUCTION STANDARDS TYPICAL UNDERGROUND SERVICE METER INSTALLATION 120/240 VOLTS SINGLE PHASE	DATE: 10-27-98 SHT No.: 1	REVISION 1
		CONSTRUCTION STANDARD No.	S-5

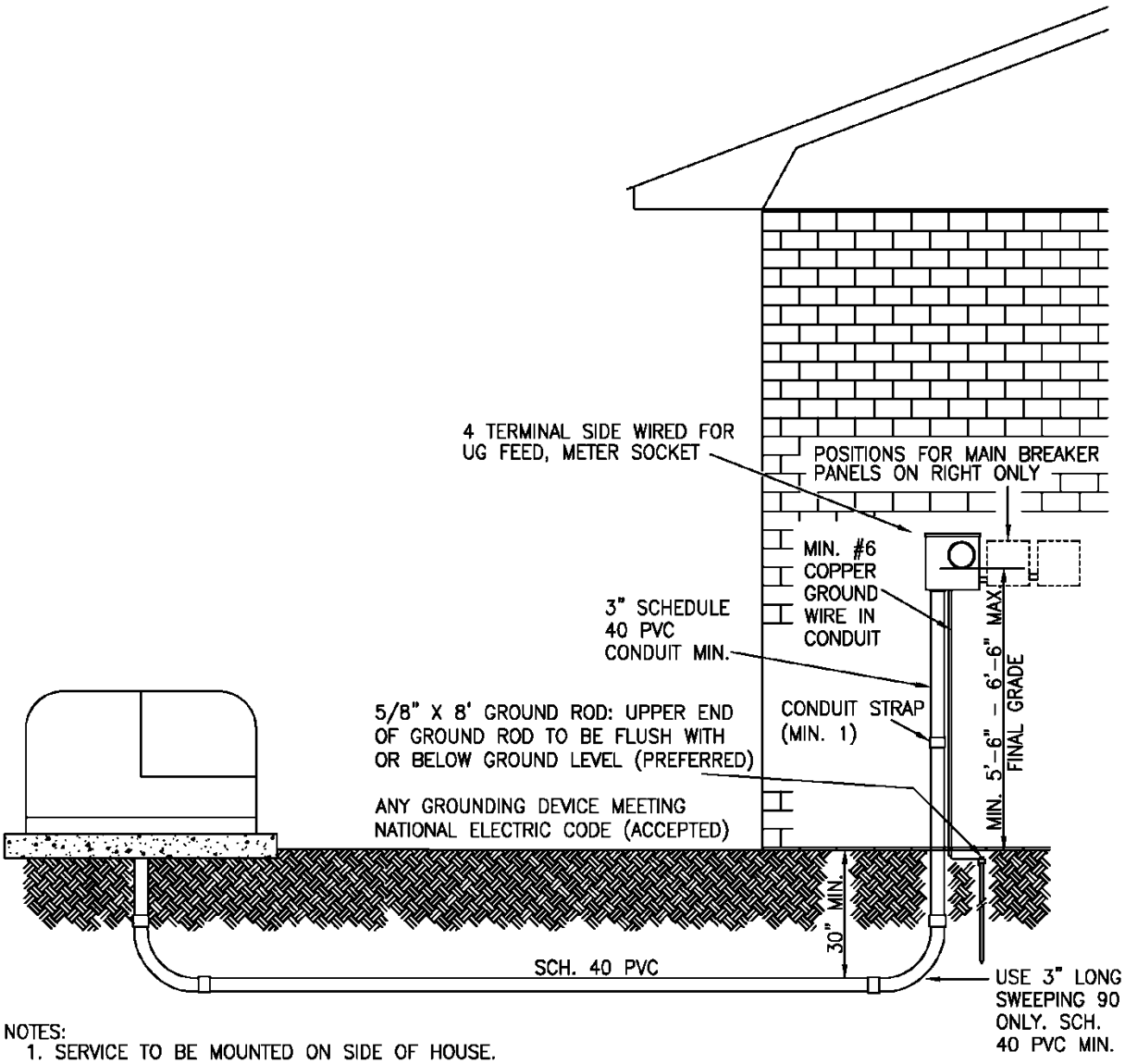

NOTES:

1. SERVICE TO BE MOUNTED ON SIDE OF HOUSE.
2. ALL NON-CURRENT CARRYING METALLIC PARTS TO BE EFFECTIVELY GROUNDED.
3. CUSTOMER TO PROVIDE AND INSTALL ALL CONDUIT AND PULL STRING TO N.L.R.E.D. PADMOUNT TRANSFORMER
4. IF BUILDER'S PLANS CALL FOR A DECK OR PATIO, ELECTRICIAN TO EXTEND CONDUIT BEYOND EDGE OF SLAB OR DECK.
5. N.L.R.E.D. TO INSTALL UNDERGROUND SERVICE.
6. SERVICE TRENCH TO BE INSPECTED BY N.L.R.E.D. BEFORE BACK FILLING.
7. CONDUIT SIZE MIN. 3" FOR 200 AMP, 320 AMP AND 4" ON 400 AMP.
8. ALL WORK TO BE IN ACCORDANCE WITH LATEST VERSION OF NATIONAL ELECTRIC CODE OR CITY OF N.L.R. ELECTRIC CODE OR CITY OF SHERWOOD ELECTRIC CODE. DEPENDING UPON LOCATION

	NORTH LITTLE ROCK ELECTRIC CONSTRUCTION STANDARDS TYPICAL UNDERGROUND SERVICE METER INSTALLATION 120/240 VOLTS SINGLE PHASE	DATE: 11-18-14 SHT No.: 1	REVISION 1
		CONSTRUCTION STANDARD No.	S-6

BORDER CADD FILE: NLR8511.dwg

CADD FILE: NLRS004

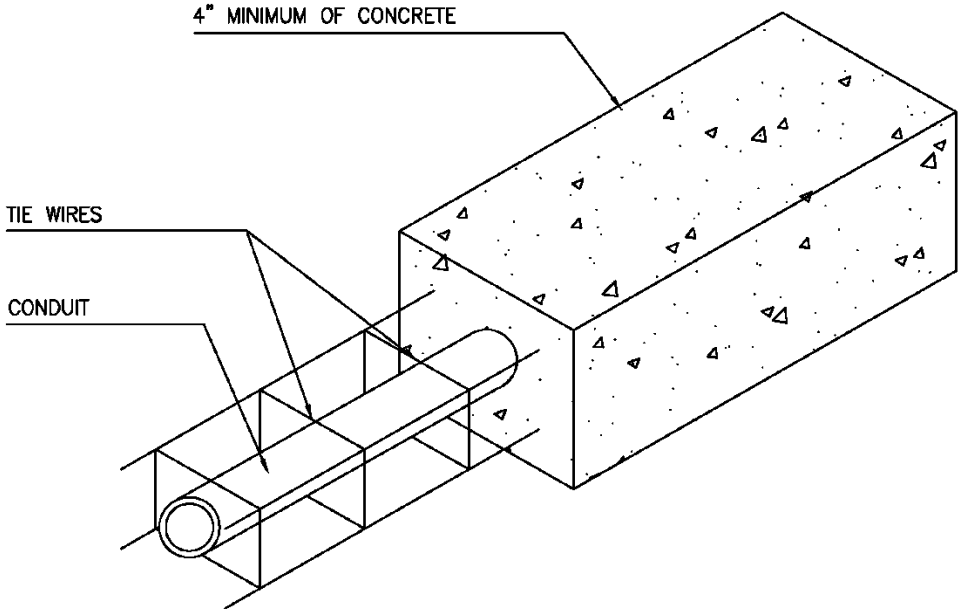

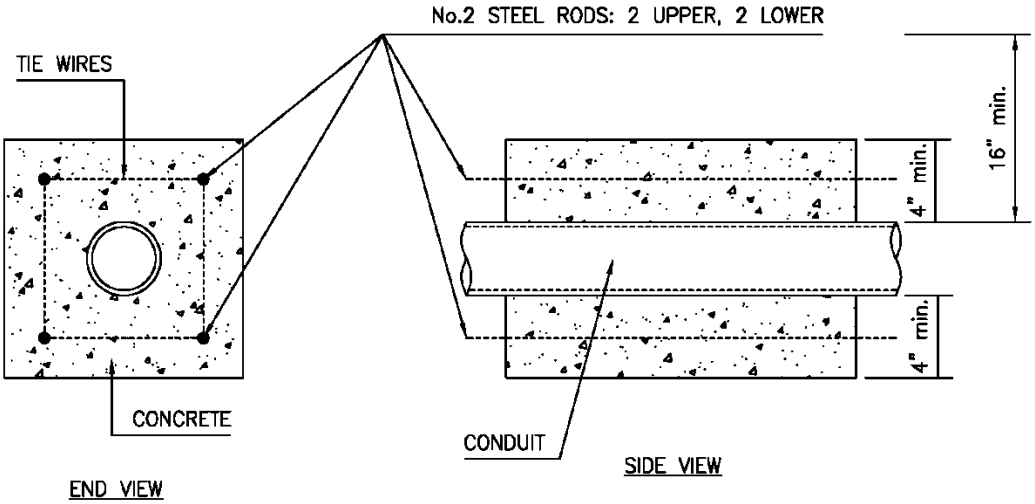

NOTE:
1. ALL CONCRETE MUST BE DYED RED IN COLOR.

NORTH LITTLE ROCK ELECTRIC CONSTRUCTION STANDARDS TYPICAL CONCRETE ENCASED CONDUIT	DATE: 11-18-14 SHT No.: 1	REVISION 1
	CONSTRUCTION STANDARD No.	S-9

BORDER CADD FILE: NLR8511.dwg

CADD FILE: NLRS004

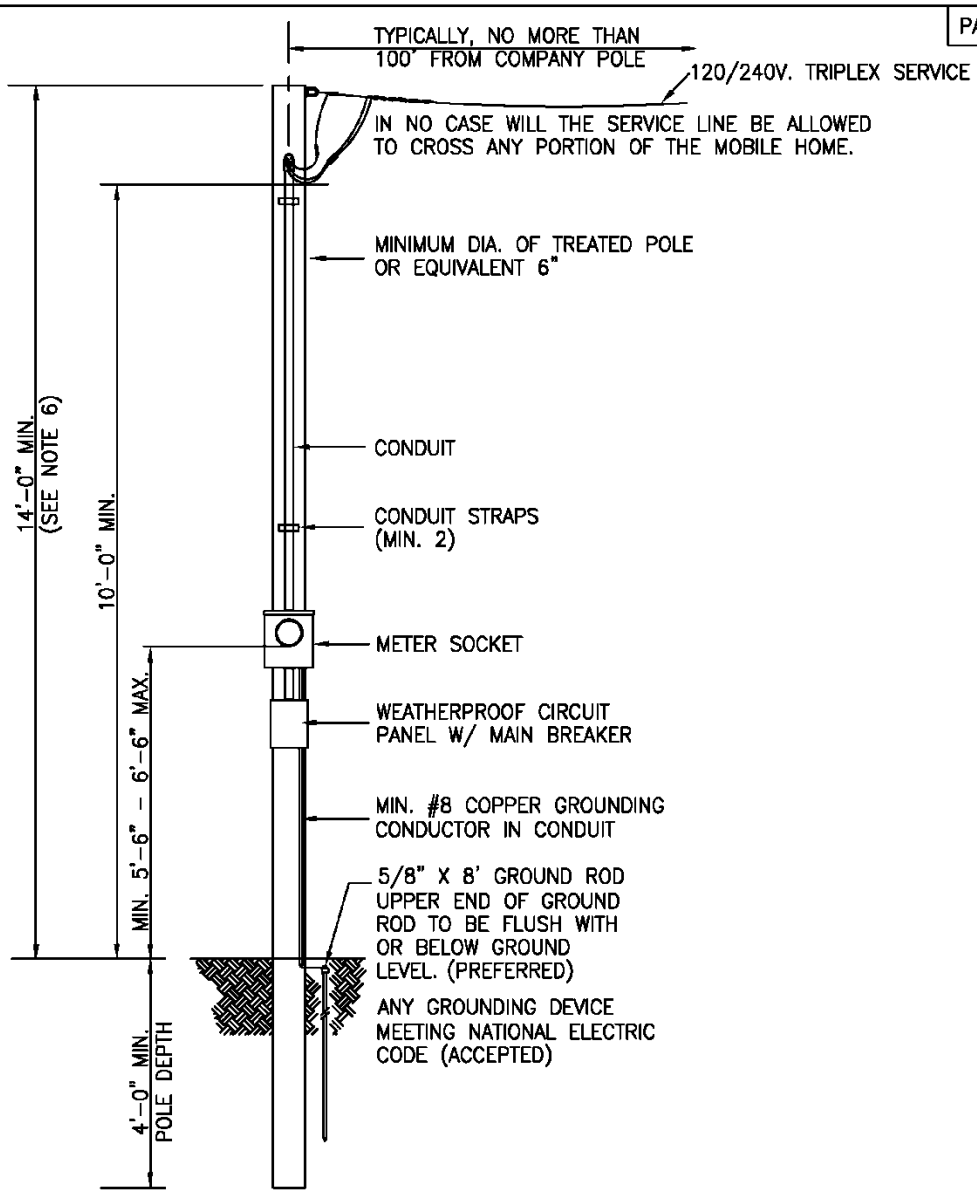

NOTES:
1. ALL NON-CURRENT CARRYING METALLIC PARTS TO BE EFFECTIVELY GROUNDED
2. N.L.R.E.D. TO SUPPLY OVERHEAD SERVICE, CONNECTORS, SERVICE DEADEND AND METER ONLY
3. ALL OTHER MATERIAL TO BE SUPPLIED BY AND INSTALLED BY CUSTOMER
4. ALL WORK TO BE IN ACCORDANCE WITH LATEST VERSION OF NATIONAL ELECTRIC CODE OR CITY OF N.L.R. ELECTRIC CODE OR CITY OF SHERWOOD ELECTRIC CODE. DEPENDING UPON LOCATION
5. ALL WORK TO BE INSPECTED BY CITY OF N.L.R. OR CITY OF SHERWOOD ELECTRICAL INSPECTOR
6. ADDITIONAL POLE HEIGHT MAY BE REQUIRED IF SERVICE CROSSES STREET, ALLEY OR DRIVEWAY TO MAINTAIN PROPER CLEARANCE PER N.E.C. CLEARANCES.

BORDER CADD FILE: NLR8511.dwg

NLR	NORTH LITTLE ROCK ELECTRIC CONSTRUCTION STANDARDS TYPICAL TYPICAL INSTALLATION – CENTRAL SERVICE POLE	DATE: 10-27-98 SHT No.: 1	REVISION 1
		CONSTRUCTION STANDARD No.	S-8

CADD FILE: NLRS007

SECTION 9 TRANSFORMERS, VAULTS & SUBSTATIONS

9.1 General Comments

When large concentrated loads or long distances are encountered, it is frequently necessary to install transformers on or in the Customer's property. In such cases, high voltage conductors are taken directly to the transformer. Whether transformers are to be installed outside, on, or in the Customer's property, a suitable location must be provided by the Customer. The Customer shall consult the Department regarding the location, size, and construction of the facilities during the design and planning phase

In the interest of public safety, it is imperative that all transformers be readily accessible to the Department at any time of the day or night. In all but the most unusual cases, the Customer must equip each door (or other barrier) between the transformer and the nearest public access with locks that can be opened by the Department. These locks will be provided by the Department and installed by the Customer.

For ready access to unenclosed pad mount transformers, a minimum clearance of three feet from the side and back edges of the pad and twelve feet from the front of the transformer must be maintained at all times.

The Department will not energize its facilities until the installation is made in accordance with manufacturer recommendations, engineering standards, is approved by authorities having jurisdiction, and is acceptable to the Department.

9.2 Fences, Screen Walls, Decorative Walls

The Department will not construct, reimburse the Customer, or accept ownership and maintenance responsibility of any fences, screen walls, or decorative walls around pad mount transformer installations or vaults. Prior written approval must be obtained from the Department before the Customer constructs such walls or fences. Adequate space and means of ingress and egress (such as wide removable panels) must be provided to operate, maintain, remove and replace transformer, metering or other equipment located behind the fence or wall.

9.3 Types of Transformer Installations

The Department provides electric service from one of the following general transformer installations:

(1) Pole mounted transformers, one or cluster of two or three transformers
(2) Pad mount transformers, open

9.4 Pad mount Transformers

Pad mount transformers are generally provided, owned and maintained by the Department for underground service to residential subdivisions, mobile home parks, shopping centers, and commercial and industrial customers. Consult the Department for requirements and availability in totally underground systems.

For pad-mount transformers in non-residential applications, the Customer will provide the service lines to the secondary connectors. These lines must be copper and must not be larger than 500 MCM in size.

9.5 Termination of Secondary Conductors to Transformers For Non-Residential Services

Terminals for secondary conductors shall be installed as provided in Section 8.11, Termination of Conductors.

The phasing, sizing and proper length of conductors is the sole responsibility of the Customer. The Customer shall also be responsible for properly marking the phases. Connection of the terminals to the connectors of the transformer will generally be made by the Department.

SECTION 10 METERING INSTALLATIONS AND EQUIPMENT

10.1 General Comments

The metering equipment, while furnished by the Department, is usually installed on the Customer's premises (on Customer owned building, pole or structure) as part of the service entrance equipment, therefore provisions must be made for it in the Customer's installation. The metering equipment provided by the Department consists of, as required, watt-hour meters, current transformers, demand meters, recording demand devices, metering transformers, relays, color coded meter cables, test blocks, and other equipment. The type of equipment supplied will depend on the requirements of the applicable rate schedule and the Department's standard practices. The Customer may be required to provide or install adequate attachments or devices for attaching Department's metering facilities to the building. This may require running conduit through eaves of roof and other similar necessities, that could alter the Customer's building.

No installations on porches or car ports.

10.2 Meter Connections & Seals

The Department shall install the meter and seal all meters and metering equipment. Except as noted below, only the Department and its authorized agents are permitted to break or replace a seal, or to remove or change a meter. Under certain conditions, and with specific approval of the Department, authorization may be obtained by a licensed electrical contractor to remove a Department meter seal. The contractor shall obtain approval prior to removing the meter seal, or notify the Department after doing so under unusual circumstances. Any infringement or violation shall be dealt with in accordance with the Department procedure for dealing with meter tampering.

The wiring between the main service entrance switch and the meter enclosure shall be of approved service entrance cable and shall be enclosed in conduit or electrical tubing of not less than 1" inside diameter, or auxiliary gutter.

Meters and instrument transformers will be connected in the service entrance on the line side of the main switch in the following sequence: meter equipment - service switch - fuse - load. Except in the case of 480 volt service with self-contained metering as stated in Section 7.8, 480 Volt Meter Service.

10.3 Meter Clearance

Meters and metering equipment enclosures shall be mounted in locations which will provide at least six inches clearance on all sides and at least four feet in front. Exceptions to this section must be approved by the Department.

10.4 Outdoor Meters

An outdoor meter installation is the Department’s standard for all new installations and where practicable on rewired installations. To facilitate reading by both the Customer and the Department and to provide accessibility for testing, the Department requires that outdoor meters be mounted between five and six feet above ground level. (Locations inside porches or beneath car ports are not considered as being outdoors.)

10.5 Location Of Meter Installations

The preferred meter location for residential service is outside of the building on the side of residences within three feet of the front wall and outside of backyard fences, so as to minimize the Department's required access on the Customer's premises. The Department will endeavor to select a meter location which will be satisfactory and economical for the Customer and at the same time convenient to the Customer in providing the necessary connections as part of the service entrance installation.. See Drawings.

Prior approval of the Department is required to locate the meter other than in the preferred location, and the Customer must pay any and all appropriate charges. Approval of the Department to locate the meter elsewhere will not be given unless the meter is and will remain readily accessible.

Specific conditions for locating the meter installation vary at each commercial and industrial location. Therefore, it is advisable to consult with the Department before final plans for location of service entrance are completed.

10.6 Grouping Of Meters

When more than one meter is involved, the meters should be grouped at one location. Therefore, it is important that a meter location be selected which will provide ample space for the meters required. In group installations, the Customer shall mark both meter loops and service switches with a permanently attached metal tags or plastic picture or spec. Permanent marker or equivalent written directly on the can shall not be used and is not acceptable marking of individual meters in grouped meter locations. The lettering on each tag shall be 3/16 inch or larger and be either raised or incised on each tag. Each tag shall be riveted or glued to the meter loop or switch. The tags shall identify the space served by each meter and service switch; and will be for future reference when servicing or repairs are required. Where the Customer furnishes Ganged Factory Bussed Meter Sockets, the Customer must check with the Department for approval before purchasing. These shall have provisions for locking each individual meter space. The metering installation should be as tamper-proof as possible. It is important that the equipment be of good quality and strength so that corrosion and deterioration will not present security problems.

Diagrams of typical meter installations and layout are shown in the drawings listed below.

Drawing No.	Description
S10	Typical Multiple Meter (Preassembled), OH Service
S11	Typical Multiple Meter (Preassembled), UG Service

Where grouping of meters in a publicly accessible location is impracticable, the meter for each customer must be located in the space which the meter serves, reasonably near the service entrance switch.

10.7 Meter Mounting Height

To facilitate reading, resetting and servicing, the mounting height of the meter preferably shall be 5 1/2 feet above the ground to center of the meter, but shall not be less than 5 feet and no more than 6 feet above ground to center of the meter.

Where two meters are mounted vertically on a wall as a gang installation, the upper meter shall be mounted at least 5 1/2 feet to center above ground, and not more than 6 feet to center above ground. The lower meter shall be mounted so as to allow three inches clearance between meter enclosures. Where more than two meters are to be installed as a gang installation, they shall be mounted in horizontal rows.

Individually metered apartment complexes may have meters installed in manufactured combination meter enclosure and switch gear assemblies. Such assemblies shall not have more than six horizontal rows of meters. When such assemblies are installed indoors or in enclosures, the center of the highest meter shall not be more than 6 1/2 feet above the floor and the center of the lowest meter shall not be less than 18 inches above the floor or bottom of enclosure.

When such assemblies are mounted on the exterior walls of a building, the center of the highest meter shall not be more than 6 1/2 feet above finished grade and the center of the lowest meter shall not be less than 34 inches above finished grade. Assemblies mounted on the exterior walls of a building must be rain tight. Where more than one meter must of necessity be mounted vertically on a pole, the top meter shall be mounted no more than 6 feet to center above final grade. Additional sockets shall be mounted to allow three inches clearance between sockets and the center of the lowest meter shall not be less than 34 inches above final grade.

Meters in Mobile Home Parks served by underground services shall typically be installed as shown on Drawing S-2 (top).

10.8 Types of Meter Installations

10.8.1 Self-contained Metering Installations

Normally, residential and small non-residential loads are metered with self-contained meters. Services at 120/240 volts, single phase may have a main disconnect rated for loads up to 400 amps and have self-contained meters. Single phase self-contained meters with loads above 200 amps must have an approved meter socket containing a by-pass switch. Customers desiring three phase service with loads above 200 amps should consult the Department concerning availability of self-contained meters. Above 400 amps, all meters shall be instrument transformer rated meters and the appropriate meter can to facilitate the installation of all current transformers, meters, and potential transformers if necessary. All three phase self-contained meters must have an approved meter enclosure containing a by-pass switch.

10.8.2 Instrument Transformer Installation

When loads exceed the capacity of self-contained meters, which is 320 amps for current generation electronic meters, instrument transformers are provided by the Department. At the Department's request, the Customer's contractor or electrician shall install this equipment. As the requirements involving this installation vary so much, it is not practical to formulate requirements covering all installations. The Customer or contractor contemplating an installation of this nature shall consult with the Department as to the number, size, location of and provisions for mounting instrument transformers and metering enclosures. Upon request, the Department will furnish information regarding the type, dimensions and connections of metering equipment to be used. For larger installations it is essential that such information be obtained before wiring plans are completed.

10.8.3 Totalized Metering

In special case where the Customer has more than one service metered at the same location, totalized metering may be available. Totalized metering uses a device which receives and adds together pulses from two or more sources for the purpose of determining the coincidental peak demand. For availability of totalized metering, consult the Department.

10.9 Primary Metering Installations

Certain installations involve the use of large quantities of power where the Customer intends to use electricity without transformation or finds it convenient to own a distribution system and provide the transformers. In these cases the Department may provide service under one of the three options described below.

In many cases, the Department does not provide the supporting structure and since each installation is unique, the Customer must consult with the Department during the design phase of the proposed service.

The three options for furnishing service involving primary voltage delivery or metering are as follows:

1. Primary voltage delivery and metering: All service is delivered and metered at primary line voltage and the Customer owns and maintains all of the service transformers and substation installation, except for the metering equipment.
2. Primary voltage metering and secondary voltage delivery: All service is metered at primary line voltage and the Department owns some or all of the service transformers or substation installation. The Customer takes delivery at the secondary voltage level.
3. Primary voltage delivery and secondary voltage metering: All service is delivered at primary line voltage and the Customer owns and maintains all of the service installation on the Customer's premises, except for the metering installation. The meters are part of the service installation on the Customer's premises, but they are owned and maintained by the Department. Service is metered at the secondary voltage level.

Regardless of the option desired, when the metering installation is located on the Customer's premises, the Customer shall provide a suitable location without cost to the Department. The Customer shall also provide the Department suitable right-of-way over the premises for the Department's overhead primary circuit to the substation or in lieu thereof an underground service for primary voltage may be provided.

10.10 Meter Grounding

Grounding the metering installation is a safety consideration both for the Department and the Customer. The grounding connection shall be made in accordance with NEC Article 250 and any other referenced code and preferably in the meter enclosure. If the grounding connection is made anywhere other than the meter enclosure, the Customer shall be responsible for grounding continuity between the point where the grounding is made and the meter enclosure.

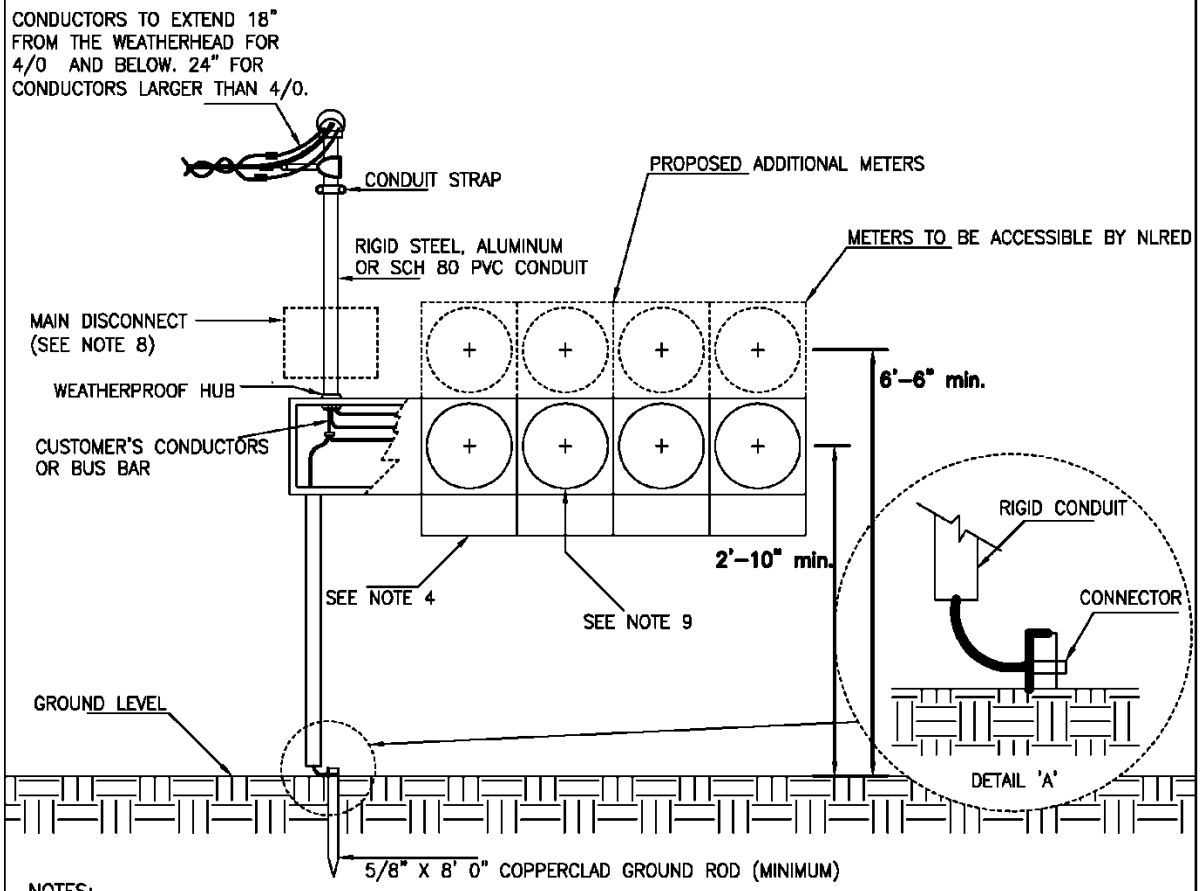

NOTES:

1. METER FURNISHED AND INSTALLED BY NLRED.
2. NLRED TO FURNISH, INSTALL, AND MAINTAIN CONNECTIONS AND CONDUCTORS FROM SERVICE POLE TO THE POINT OF ATTACHMENT.
3. ALL OTHER MATERIALS TO BE FURNISHED, INSTALLED, AND MAINTAINED BY THE CUSTOMER.
4. FOR IDENTIFICATION PURPOSES, ALL METER SOCKETS WILL BE PLAINLY AND PERMANENTLY MARKED TO DESIGNATE THE PARTICULAR APARTMENT OR OFFICE SERVED.
5. EQUIPMENT TO BE INSTALLED AT THE LOCATION MUTUALLY ACCEPTABLE TO NLRED AND THE CUSTOMER WITHIN 75' OF THE SERVICE POLE TO WHICH THE SERVICE IS CONNECTED.
6. RINGLESS METER CANS ONLY.
7. THE METER CAN MUST BE CONSTRUCTED IN A WAY TO ACCEPT A METER SEAL TO LOCK THE METER TO THE CAN.
8. A MAIN DISCONNECT IS REQUIRED FOR SEVEN OR MORE DISCONNECTS – (NEC 230-71(A)). A MAIN DISCONNECT IS RECOMMENDED IN ALL CASES FOR ISOLATION OF THIS DISCONNECT/METER GROUP FROM ANY OTHER GROUPS SERVED BY THE SAME TRANSFORMER.
9. CUSTOMER FURNISHED GANG METER ENCLOSURES MUST BE APROVED BY NLRED BEFORE THEIR PURCHASE.

BORDER CADD FILE: NLR8511.dwg

NLR	NORTH LITTLE ROCK ELECTRIC CONSTRUCTION STANDARDS TYPICAL TYPICAL MULTIPLE METER ARRANGEMENT (PRE-ASSEMBLED) OVERHEAD SERVICE	DATE: 11-18-14 SHT No.: 1	REVISION 1
		CONSTRUCTION STANDARD No.	S-10

CADD FILE: NLRS004

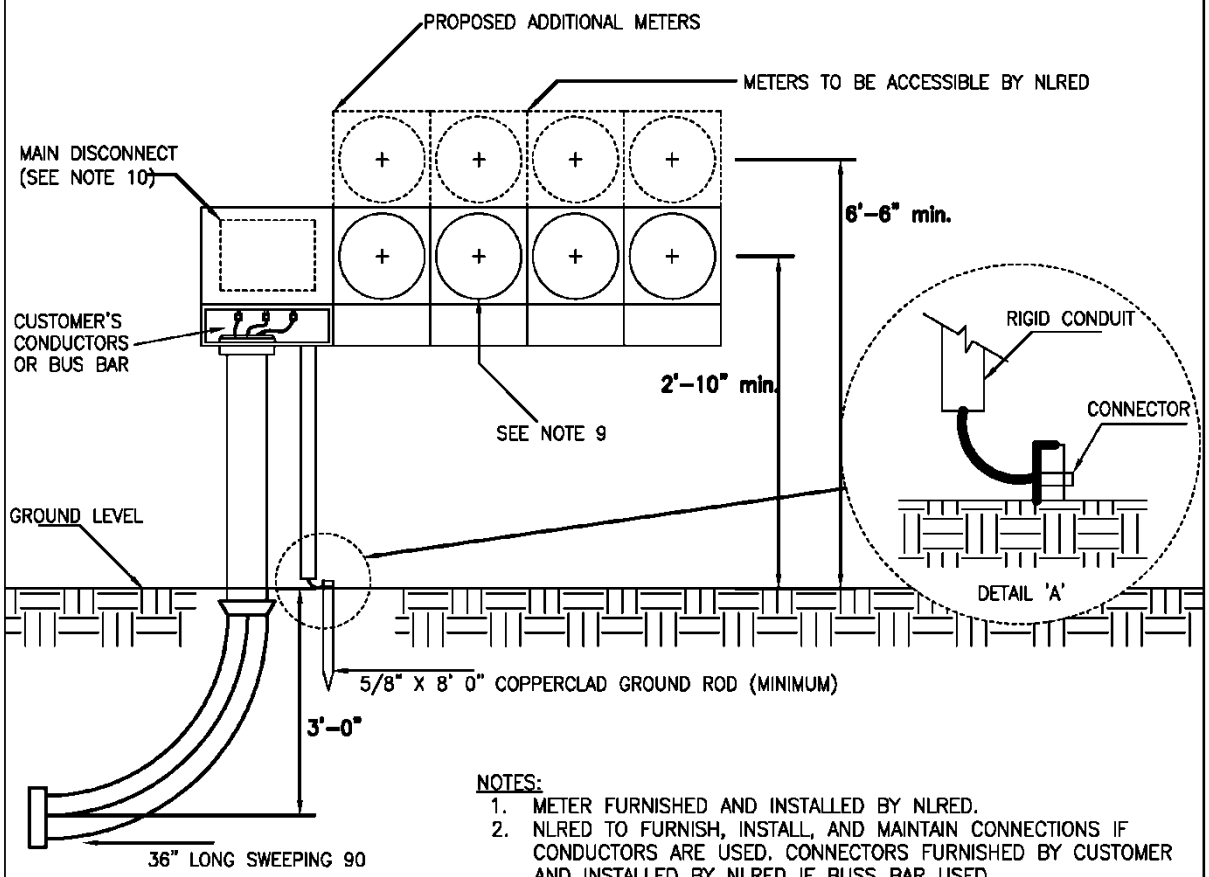

NOTES:

1. METER FURNISHED AND INSTALLED BY NLRED.
2. NLRED TO FURNISH, INSTALL, AND MAINTAIN CONNECTIONS IF CONDUCTORS ARE USED. CONNECTORS FURNISHED BY CUSTOMER AND INSTALLED BY NLRED IF BUSS BAR USED.
3. CONDUCTORES FURNISHED, INSTALLED, AND MAINTAINED BY NLRED FROM THE SERVICE TO THE METER CAN.
4. ALL OTHER MATERIALS TO BE FURNISHED, INSTALLED, AND MAINTAINED BY THE CUSTOMER.
5. FOR IDENTIFICATION PURPOSES, ALL METER SOCKETS WILL BE PLAINLY AND PERMANENTLY MARKED TO DESIGNATE THE PARTICULAR APARTMENT OR OFFICE SERVED.
6. CUSTOMER TO OBTAIN METER LOCATION FROM NLRED ENGINEERING.
7. CUSTOMER TO OBTAIN CONDUIT SIZE FROM NLRED ENGINEERING.
8. RINGLESS METER CANS ONLY.
9. THE METER CAN MUST BE CONSTRUCTED IN A WAY TO ACCEPT A METER SEAL TO LOCK THE METER TO THE CAN.
10. A MAIN DISCONNECT IS REQUIRED FOR SEVEN OR MORE DISCONNECTS – (NEC 230-71(A)). A MAIN DISCONNECT IS RECOMMENDED IN ALL CASES FOR ISOLATION OF THIS DISCONNECT/METER GROUP FROM ANY OTHER GROUPS SERVED BY THE SAME TRANSFORMER.
11. CUSTOMER FURNISHED GANG METER ENCLOSURES MUST BE APROVED BY NLRED BEFORE THEIR PURCHASE.

NORTH LITTLE ROCK ELECTRIC CONSTRUCTION STANDARDS TYPICAL TYPICAL MULTIPLE METER ARRANGEMENT (PRE-ASSEMBLED) UNDERGROUND SERVICE	DATE: 11-18-14 SHT No.: 1	REVISION 1	
	CONSTRUCTION STANDARD No.	S-11	

BORDER CADD FILE: NLR8511.dwg

CADD FILE: NLRS004

SECTION 11 CUSTOMER'S SERVICE INSTALLATION

11.1 General Comments

Information regarding characteristics and availability of service, exact points of delivery and service entrance and location and type of service equipment must be determined by consultation with the Department in planning any electrical work for new installations, for changes brought about by rewiring, for building reconstruction, or for increased load.

The Customer shall normally provide, install, own, and maintain all service cables, meter sockets, raceways, conduits, fittings, wires, fuses, main entrance and meter service switches or breakers, wire troughs, etc., on the Customer's premises beyond the point of termination of the Department's overhead service drop, or at the secondary terminals of the Department's transformer. (Exception: For residential Customers with underground service, the Department will own the service lateral. See Section 8.6, Requirements for Obtaining Underground Residential Service.) The meters and metering apparatus including metering transformers will be furnished by the Department to adequately measure the Customer's load. Any additional metering requirements shall be paid for by the Customer.

It is important that the Department be notified in advance of any substantial change in the Customer's equipment or wiring. Consultation with the Department is necessary to guard against the purchase of unsuitable equipment by the Customer, and possible damage to the Department's service equipment.

11.2 Inspection and Approvals

The wiring, electrical equipment, and appliances of the Customer should be installed in accordance with the requirements of the latest NEC and of authorities having jurisdiction. The Department does not inspect Customer premise wiring. The Department requires the Customer to have the premise wiring inspected and approved by the authorities having jurisdiction before requesting connection to the Department's service. Where inspection is required, the Department is not allowed to connect to the Customer's installation until it has been inspected and approved by the authorities having jurisdiction.

The Department reserves the right to refuse connection to any new installation and to disconnect from any existing service, should the Department learn that the wiring is unsafe or that it has not been approved. The authorities having jurisdiction also have the right to require the Department by written notification to discontinue service to an installation which has been found unsafe. The Department is not liable for any damages incurred when electrical service is discontinued under order of the authorities having jurisdiction. The Department accepts no responsibility for injury or damage to the Customer's premises or to persons on the Customer's premises resulting from defective wiring or equipment.

11.3 Meter Requirements

Refer to Section 10, Metering Installations and Equipment.

11.4 Service Entrance Conductors

The number and size of service entrance conductors are determined by the class and type of service being rendered. The service entrance conductors shall be sized as prescribed by the NEC or the authorities having jurisdiction.

11.5 Grounding of Service Entrances

The neutral conductor and metallic parts of the service entrance including all meter enclosures, and instrument transformer enclosures, if required, shall be adequately grounded according to the NEC or authorities having jurisdiction.

Typical grounding of service entrances:

(1) Single phase 120 volt, two wire system: The identified neutral conductor.
(2) Single phase three wire system: The identified neutral conductor.
(3) Multiphase systems having one wire common to all phases: The identified common conductor.
(4) Multiphase systems in which one phase is used to supply 120/240 volt, single phase service: The identified neutral conductor.

The ground shall be made to a driven rod as shown in Drawing and others. Where a metallic water system pipe is available, it should also be connected to the service entrance ground. In no case shall gas piping be used as a ground for electrical services. Grounding requirements are shown on many of the drawings in the service standards. Refer to the service type of interest.

All metal buildings, metal structures, and metal siding on buildings to which electric service is to be supplied shall be permanently grounded to the service entrance ground before service is connected.

11.6 Service Entrance from Overhead System

11.6.1 General Comments

The service entrance meter loop shall meet the requirements of all applicable codes and the Department's Service Standard requirements. It shall be installed, owned, and maintained by the Customer. In general, the service mast must be above the service drop attachment. See Drawing S-3. The service drop attachment shall be high enough to provide the required clearances in Section 7.3, Clearances. The Customer shall provide the required conductors in the meter loop and leave three feet of wire outside the service entrance head for connection to Department's service drop.

11.6.2 Service Entrance Masts

When a building is not tall enough to attach the service drop at a point to provide for the necessary line clearances above the ground, a "service mast" or other approved extension shall be furnished and installed by the Customer. The extension must permit the point of attachment to be located at a proper height above ground as defined in Section 7.4, Clearances.

Rigid/Intermediate metal steel and rigid aluminum are approved conduit materials for service masts. Metallic conduits or brackets used as a service mast or extension must be electrically bonded and grounded to the ground wire terminal in the meter enclosure.

Service masts or other types of extensions must be able to withstand the maximum loading requirements placed on them by the service line attached. Mast supports may be used to support loading. Mast supports must be painted or otherwise treated to provide protection against corrosion and rotting. The Department reserves the right to refuse to attach its service drop to any service mast or extension considered to be a hazard to public safety.

The Department assumes no responsibility of any kind or in any manner for any failure of the Customer owned service mast or extension.

Refer to Drawing for typical installation of service mast above the eaves.

11.7 Service Entrance from Underground Distribution System

The service entrance riser conduit shall be rigid/intermediate metal steel, rigid aluminum, or Schedule 40 PVC securely fastened, installed, owned, and maintained by the Customer. Refer to Section 8, Underground Service and Installations. Consult the Department for additional information and specifications.

11.8 Service Disconnecting Means

11.8.1 Disconnecting Means for Services Less than 600 Volts

The Customer is required to provide each set of service entrance conductors with a means of disconnecting all energized wires from the source of supply. The disconnecting means may consist of not more than six switches with over current protection or six manually operable circuit breakers mounted in a single enclosure, in a group of separate enclosures, or in a switchboard.

The disconnecting means must be located in a readily accessible location near the point of delivery outside of a building or structure.

For any 480 volt self-contained meter installations, the Customer shall supply both a non-fused disconnecting means on the supply side of the Department meter AND a fused disconnect required by the NEC after the 480 volt self-contained meter.

All equipment must be U. L. approved and be installed in enclosures suitable for prevailing conditions, such as weather extremes or corrosive environments.

For more details, refer to NEC Articles 230(F) and (G) and any other referenced code.

11.8.2 Disconnecting Means for Services Over 600 Volts

The Customer shall provide a means of disconnecting all energized conductors of each service entrance from the source of supply. The disconnecting means shall comply with the requirements of the NEC Article 230-208 and any other referenced code and/or authorities having jurisdiction.

Where the Customer has self-generation or takes two or more points of service which can be tied together, automatic trip circuit breakers shall be required. Relaying on these circuit breakers should be coordinated with the Department.

For disconnecting means required on service above 4160/2400Y volts, contact the Department.

11.9 Isolation Switches for Services Over 600 Volts

The Customer shall install isolating switches between the supply conductors and the disconnecting means. The isolating switch shall isolate the circuit or equipment from any source of power. (Isolating switches are required as a safety measure and strict compliance is necessary to protect the interest of the Customer and the Department.) The disconnecting means shall separate the conductors of the circuit from the source of supply.

Isolation switches are not required where disconnecting equipment is mounted on removable truck panels or metal-enclosed switch gear units which cannot be opened unless the circuit is disconnected, and which, when removed from the normal operating position, automatically disconnects the circuit breaker or switch from all live parts. Also, fuses or cutouts used with non automatic oil

switches as disconnecting means may serve as isolating switches provided that they can be operated as a disconnect switch and completely disconnect the oil switch and all service equipment from the source of supply. The Customer shall be equipped to operate the fuses or cutouts. Finally, pole top air break switches which are accessible to the Customer's authorized personnel only and which are arranged so that grounding connection can readily be made on the load side may be used as isolating switches.

SECTION 12 CUSTOMER'S ELECTRICAL EQUIPMENT

12.1 General Comments

The Department offers the following suggestions as an aid in maintaining reasonably uniform voltage and continuous service. The type, size and mode of operation of equipment frequently affects the voltage and the quality of service received. Three wire, single phase and all multiphase circuits should be arranged to maintain load balance on the individual circuits and the main service within 10%. Many of these details can be best resolved when the wiring is in the design stage.

The Department recommends that the Customer's wiring be designed so that the voltage drop between the disconnecting means or service entrance switch, and the farthest outlet be limited to not more than 2% at full load. A Customer shall not cause the voltage on the primary side of a distribution transformer to sag more than 4% of the nominal voltage by the operation of the Customer’s facilities.

Equipment such as computers and other sensitive electronic devices may be adversely affected by minor voltage variations. It is the Customer's responsibility to provide any uninterruptable power supplies, voltage regulating equipment or other protective apparatus for these sensitive devices and equipment.

12.2 Radio and Television Interference

Some types of utilization equipment, including certain types of motors, equipment depending for its operation upon frequent making and breaking of the circuit, X-ray machines and other devices, may cause unsatisfactory operation of television, radios and other electronic equipment unless especially designed or equipped to prevent such interference. In purchasing utilization equipment, the Customer should inquire regarding such interference characteristics and select non-interfering types. Where interference is experienced from utilization equipment, it can often be eliminated or minimized by equipping the interfering device with an U. L. approved interference suppresser. These suppressers are available through many retail stores.

12.3 Electric Heating

Large heating appliances should be connected to 120/240, 120/208, or 277/480 volt circuits and arranged to operate 240, 208, or 480 volts on high heat so far as practicable.

12.4 Motor - Voltage Rating

Single phase motors manufactured under American National Standard Institute (ANSI) Standard C84.1-1970 have 115 or 230 volt nameplates and, if three phase, have 208, 230, 460, 2,300, 4,000, or 13,200 volt nameplates. These are nominal voltage ratings and do not imply that the motors shall be operated at the exact voltages supplied. Motors may be supplied with nominal voltages as listed below:

Table 12.4-4. Nominal Voltage Rating of Motors

Type of Service	Nominal Supply Voltage	Motor Voltage Rating (Nameplate)
Single Phase	120	115
Single Phase	240	230
Three Phase	208	208
Three Phase	240	230
Three Phase	480	460
Three Phase	2,400	2,300
Three Phase	4160	4,000
Three Phase	13,800	13,200

All motors should have a manufacturer's nameplate indicating the voltage, current rating, speed and horsepower rating for continuous or intermittent use as the case may be. This nameplate should also carry the NEMA "code letter" designation of the motor. When a motor is rewound to produce a change in its original design, a new nameplate should be attached indicating the new characteristics and the name of the firm or person making the change.

12.5 Motor Starting

12.5.1 General Comments

Most motors, when starting at rated voltage, draw current much in excess of full load running current. Also, the power factor of this starting current is usually low. This causes, for a brief period, a voltage drop or lighting flicker. It is essential that the Customer's equipment have good starting characteristics to assure against objectionable effects to the Customer's equipment and to service to other Customers. **Soft-start motor load controllers must be used**. The Department finds it necessary to establish certain limitations for the maximum allowable starting currents of motors to be connected to its lines. Frequency of starting is also a factor.

Considerable latitude in the amount of starting current is permissible under certain conditions, especially where the motors are started not more than two or three times per day. It is necessary that the Customer consult with the Department as to the acceptability of the proposed installation in this respect. The Department, however, can give no warranty, expressed or implied, that particular conditions may not require change, unless starting currents are within the limits in the following sections.

12.5.2 Single Phase Motors

12.5.2.1 Horsepower Rated

Single phase motors rated in horsepower may be started "across the line", that is, at full rated voltage by merely closing a switch. It is recommended that single

phase motors larger than 1/2 hp be operated at 240 volts. Locked rotor motors specified in Table 13.5-5, will be permitted under the following conditions only:

1. When such motors are provided with proper current limiting starting equipment; or
2. When the locked rotor current of each motor in an installation is less than that of the largest motor permitted in the installation; or
3. When the total locked rotor currents of two or more smaller motors which may be started simultaneously are less than the allowable locked rotor current of the largest motor in said installation.

Table 12.5-5. Allowable Starting Currents For Single Phase Motors Rated in Horsepower

Equipment Rated	Locked Rotor Current
115 volts	
All Sizes	50 amps
230 volts	
2 hp. or less	60 amps
3 hp.	80 amps
5 hp.	120 amps
6-1/2 hp.	150 amps
Over 6 1/2 hp.	Consult the Department

The NEC contains specific information for motor characteristics.

12.5.2.2 Btu/h Rated

Years of development have resulted in single phase, hermetically sealed air conditioning and heat pump units that, from the Customer's stand point, are as efficient and trouble-free as three phase units up through units sized with a nominal 60,000 Btu/h (5 ton) rating. All hermetically sealed motors in this category will be served single phase provided they do not exceed the locked rotor current values of Table 13.5-6.

Table 12.5-6. Single Phase Air Conditioning and Heat Pump Equipment Rated In BTU Per Hour

Equipment Rated	Locked Rotor Current
115 volts	
All sizes	50 amps
230 volts	
20,000 BTU/H or less	60 amps
20,000 Btu/h to 60,000 Btu/h	60 amps plus 3 amps per 1,000 Btu/h in excess of 20,000 Btu/h
60,000 BTU/H	150 amps
Over 60,000 Btu/h	Consult the Department

For larger homes requiring heating and cooling capacity in excess of a nominal 60,000 Btu/h, (5 tons), the Customer should consult the Department to determine the type of service that will be supplied. The Customer should not overlook the possibility of using two or more independent units which can provide better zone control.

12.5.3 Three Phase Motors

12.5.3.1 Horsepower Rated

Because conditions vary widely at different points on the system, no specific rule can be written as to the size of polyphase motors which may be connected, either for " across-the-line" starting or with starting equipment to limit the starting current. Therefore, it will be necessary to consult the Department for motors of 10 hp size and larger to determine the maximum value of starting current permissible at a given location. Refer to Section 14.9, Converters - Operation of Three Phase Motors from Single Phase Electric Supply, for phase converter operations.

12.5.3.2 Btu/h Rated

Where it has been determined that three-phase service will be rendered, motor starting currents shall not exceed the following values: 159 amps if the service voltage is 208V, 150 amps if the service voltage is 230 V, or 75 amps if the service voltage is 460 V. For motors exceeding these values and for units greater than 120,000 Btu/h, (10 tons), it will be necessary to provide facilities to limit the starting current to values specified by the Department for the location involved.

12.5.4 Motor Starting and Control Equipment

All motors and motor control equipment shall be installed in accordance with the NEC Article 430 and any other referenced code.

Auxiliary starting devices must be used on all motors which cannot be safely subjected to full voltage while starting. They must also be used on all motors which, if started at 100% voltage, would draw currents in excess of those discussed in 13.5.2.1 (Single Phase Motors) Horsepower Rated, 13.5.2.2 (Single Phase Motors) Btu/h Rated, and 13.5.3.2 (Three Phase Motors) Btu/h Rated. The auxiliary starting device must limit the starting current such that the values in the previous sections are not exceeded. The auxiliary starting device should be designed in such a way that the motor can be thrown into the running position before the motor has reached rated running speed in the starting position.

Typically, electric irrigation motors above 60 hp served at three phase, 480 volts will be started with reduced voltage starting equipment. The Department may specify the particular voltage tap setting to be used.

Motor Starters/Controllers of the Silicon Controlled Rectifier (SCR) type as well as other similar devices can create harmonic disturbances that may have detrimental effects on the Department's electric system and/or service to the Customers. Disturbances of this nature attributable to the use of these type devices must be corrected without undo delay, at the Customer's expense, to the satisfaction of the Department. Consult the Department for information.

12.6 Critical Service Motor Operation

Where continuous operation of a motor is essential, the no-voltage release should have a time delay relay, which will prevent the opening of the circuit in the event of momentary voltage fluctuation. The Department will assist the Customer in selection of an automatic starting device and any other device to hold motors on line during voltage disturbances.

12.7 Motor Protection

12.7.1 Phase Reversal Protection

Reverse phase relays are required on three phase elevator services (NEC Article 620) and it is strongly recommended that they be installed by the Customer where accidental reversal of motor rotation would cause serious inconvenience, damage, or delay. The Department shall not be responsible for any damages caused by phase reversal.

12.7.2 Over Current Protection

The NEC requires that adequate over current protection be provided in each phase on all motor installations. The Customer must ensure complete protection against "single-phasing" on all three phase motors. Over current protection in two phases is not adequate protection for this condition. Single phasing on the distribution system is necessary at times for fault clearing and switching and occurs occasionally due to unforeseen circumstances. Motor protection is the responsibility of the Customer.

12.7.3 Partial or Complete Loss of One or More Phases

It is recommended that all polyphase motor installations be equipped with an automatic disconnecting device as part of the Customer's installation, which would disconnect the motor from the supply voltage in the event of partial or complete loss of one or more phases. Partial or complete loss of one or more phases may be caused by failure of the Customer's conductors, circuit breakers, fuses, connectors, etc., or by partial or complete loss of one or more phases from the Department's electric distribution facilities. The Department shall not be held responsible or liable for damage to the Customer's installation due to such causes. Motor protection is the sole responsibility of the Customer.

SECTION 13 CUSTOMER'S SPECIAL EQUIPMENT

13.1 General Comments

So that the Department may provide adequate electric service to all its Customers and avoid unnecessary delays in supplying electric service, it is recommended that the Customer, prior to purchase, submit to the Department information and specifications of any special equipment that might cause interference with the service to the Customer or to others. This prior information is especially important if the special equipment requires additional electric facilities for its satisfactory operation. The Department will not connect electric service until all problems caused by utilization equipment that may cause interference with other Customers has been remedied by the Customer providing the necessary corrective equipment. The Department reserves the right to inspect and test any equipment connected to its lines and to require that such equipment be provided with nameplates showing the voltage, phase, full-load amperes, maximum current, maximum kVA and such other information as may be necessary to determine the operating characteristics of the equipment.

13.2 Additional Electric Facilities

A Customer may desire or require additional facilities (such as emergency service, oversized transformer, separate transformer, dual service, etc.) to minimize voltage fluctuations or interference with other Customers, or to provide satisfactory operation of the Customer’s electric equipment. Such facilities, where practicable, will be furnished by the Department in cases where the Customer agrees to pay in some manner the additional cost of such facilities. Consult the Department for details.

13.3 Radio and Television Antennae

Antennae for radio, radio transmitter, and/or television sets must never be erected over, under, or in close proximity of either side of the Department's power lines or other wires carrying electric current. Nor should they be constructed in such a place where they may accidentally fall into energized wires. Antenna lead in and other wires shall not cross over and should not cross under Department's electric conductors. Such location of the Customer's apparatus may result in serious accidents, damage to the equipment, or poor reception. Where proximity to electric power service conductors cannot be avoided, a ten foot minimum clearance is required. The attachment of antenna systems to poles or service masts carrying the Department's conductors is strictly prohibited. Such attachments will be removed upon discovery by the Department, and the responsible party will be billed for all removal costs.

13.4 CATV and Carrier Installations

Service for the operation of radio and television transmitting apparatus will be furnished under conditions specified by the Department and conditions of use of such service shall not cause undue disturbance of electric service to other Customers. Where necessary, suitable filters or other devices shall be installed by the Customer in such a manner as to prevent radio, telephone, and television

interference by way of the electrical power supply. Consult the Department for installation of community antenna television (CATV) systems on Department poles. The Customer must sign a Service Agreement and the Department will designate the service locations and specifications for attachment and operation on Department poles.

13.5 Electric Welders and Furnaces

Electric welders and arc furnaces usually have such severe load characteristics that special attention must be given to the service installation to prevent interference and impairment of service to the Customer and others. The Department is prepared to assist the Customer in planning installations of electric welders and industrial type furnaces. It is essential in every case that the Department be consulted when such installations are being planned and before commitment to purchase equipment, so that there will be ample time to determine the electrical supply requirements.

13.6 Radio and Television Transmitters, X-ray, Diathermy, and High Frequency Heating Equipment

Customers using radio and television transmitters, x-ray, diathermy, and high frequency heating equipment must install and maintain devices approved by the Department for protection of transformers, meters, and other service equipment. Should the operation of the Customer's equipment impair their own or other Customers' service, then a separate transformer and service entrance connection or other appropriate corrective measures shall be required. The Department shall not be required to furnish or continue service to radio installations, X-ray apparatus, or other apparatus, the operation of which causes disturbances on the Department's distribution circuits.

It is recommended that X-ray and similar imaging devices be connected to dedicated circuit run directly to the service entrance.

Wired-radio, or any related means of transmitting information, shall not be connected or coupled to the Department's lines except by special arrangement with the Department.

Consult the Department for service to commercial radio and television facilities.

13.7 Customer’s Capacitors and Other Reactive Equipment

It is desirable and important to maintain the power factor of any load as near unity as possible. Maintaining a high power factor may allow a reduction of conductor sizes and equipment capacities. This may suggest the installation of capacitors. Capacitors must be applied more carefully than most types of electrical equipment in order that satisfactory operation and maintenance will result. When a Customer installs capacitors to improve the power factor, the Customer should provide, or at the request of Department, the Customer shall provide automatic disconnecting of capacitors when the equipment causing the low power factor is not operating. Before any such equipment is installed, the Department shall be contacted.

Where large capacity motors are to be installed, consideration should be given to the use of synchronous type equipment.

13.8 Emergency Standby Generators

13.8.1 General Comments

The Customer may permanently install a standby generator to supply part or all of the load in the event of an interruption in the supply of the Department's service. The Customer shall furnish the Department complete nameplate data on the generator to be installed and consult with the Department on the method of connection.

Customers having electric generating equipment installed as standby for the electric service taken from the Department shall install and maintain protective devices and equipment as approved by the Department. The protective devices and equipment to be installed in any given installation will depend on the size and characteristics of the Customer's load and generating equipment. In all cases, the Department must be consulted before the Customer's equipment is installed.

Generating equipment installed by the Customer shall be connected to the load by means of a double-throw switch or by a circuit breaker interlocked so that the Customer's generation cannot feed into the Department's system. Use of the switch or breaker also assures that the re-energizing of the Department's supply lines after a service interruption will not adversely affect either the Customer's installation or the Department's facilities.

13.8.2 Parallel Operation of the Customer's Generation

When the Customer desires to operate in parallel with the Department's electric system, the Customer shall execute a Service Agreement with the Department providing for paralleled operation. The Customer shall provide synchronizing, load-control, and other equipment that may, in the Department's judgment, be required for successful parallel operation. Refer to the Department guideline on distribution co-generation.

13.9 Converters - Operation of Three Phase Motors from Single Phase Electric Supply

The phase converter is used to simulate a three phase voltage from a single phase source. One converter is recommended for each three phase motor. The phase converter must be matched with both the motor horsepower and the motor application. Special consideration must be given to the type of phase converter being used on the motor. The Department must be consulted prior to the installation of a phase converter.

13.10 Dual Feeders and Load Transfer Equipment

The Department must be consulted in those cases where the requirements of certain Customers for extremely high continuity of electric service make it desirable that dual feeders and load transfer equipment be installed. The

Customer is responsible for paying all costs associated with such an arrangement including, but not limited to the installation, operation and maintenance of all facilities and reserved substation capacity. Consult the Department for information on the automatic transfer scheme guideline.

SECTION 14 CUSTOMER'S SERVICE OBLIGATIONS AND PROTECTION

14.1 Lightning and Other Surge Protection

Lightning arrestor protection by the Customer is not required for services under 600 volts. With the proliferation of electronic home entertainment equipment and appliances, the Department suggests that the Customer consider installing surge protection. It shall be installed on the load side of the meter, and shall not be connected to the service drop conductors nor to the service entrance conductors. The surge protection should be installed as closely as possible to the device to be protected.

Customers with services above 600 volts should install lightning arrestors. Consult the Department.

14.2 Public Sign Clearance

Clearances of signs from conductors shall meet or exceed the clearance requirements set forth in the National Electric Safety Code or other authorities having jurisdiction.

14.3 Working in Close Proximity to the Department's Facilities

Customers should use extreme caution to avoid contact when working in the proximity of the Department's overhead or underground conductors or other electric facilities to prevent injury and to prevent damage to either the Department's or the Customer's equipment. The Department should be consulted for location of the Department's conductors and electrical facilities before operating equipment near the Department’s facilities. In locations with underground facilities, the Department must be consulted before digging. It shall be the responsibility of the Customer to stay clear of all electric facilities.

14.4 Attachments to Department Poles

Attachments to Department poles are generally not allowed. Attachments may be made only with approval of the Department. An attachment agreement may be required to be signed and such agreement will set forth any charges. All attachments are to be made under the supervision and to the satisfaction of the Department. All such attachments must be made in accordance with the specifications of authorities having jurisdiction, where applicable. Consult the Department.