CITY OF NORTH LITTLE ROCK, ARKANSAS
COMMERCE DEPARTMENT
Mary Beth Bowman, Director

120 Main Street, North Little Rock, AR 72114
P.O. Box 5757 North Little Rock, AR 72119
501-975-8881Phone
501-975-8885 Fax

INVITATION TO BID

Bid Number: 15-3333 Date Issued: January 20, 2015

Date & Time Bid Opening: Thursday, February 5, 2015@ 10:15 am.

TRANSFORMERS FOR THE NORTH LITTLE ROCK ELECTRIC DEPARTMENT

SPECIFICATIONS ATTACHED.

For technical questions and/or comments, contact Karen Allen at 501-992-4058 or Greg Woodward at 501-992-4073.

If you are obtaining this bid from our website, please be reminded that addendums may occur. It is therefore advisable that you review our listings for attachments including any changes to the bid.

The City of North Little Rock encourages participation of small, minority, and woman own business enterprises in the procurement of goods, services, professional services, and construction, either as a general contractor or sub-contractor. It is further requested that whenever possible, majority contractors who require sub-contractors, seek qualified small, minority, and woman businesses to partner with them.

EXECUTION OF BID

Upon signing this page, the organization certifies that they have read and agree to the requirements set forth in this bid including conditions set forth and pertinent information requests.

Name of Firm:_____ Phone No.: _____

Tax Identification No.:_____

Business Address: _____

Signature of Authorized Person: _____

Title:_____ Date: _____, 2014

UNSIGNED BID COVER SHEET WILL BE REJECTED.

CITY OF NORTH LITTLE ROCK, ARKANSAS
COMMERCE DEPARTMENT
Mary Beth Bowman, Director

120 Main Street, North Little Rock, AR 72114
P.O. Box 5757 North Little Rock, AR 72119
501-975-8881Phone
501-975-8885 Fax

INVITATION TO BID

Bid Number: 15-3333 Date Issued: January 20, 2015

Date & Time Bid Opening: Thursday, February 5, 2015 @ 10:15am.

SINGLE PHASE TRANSFORMERS FOR THE NORTH LITTLE ROCK ELECTRIC DEPARTMENT

Pricing Sheet

(7) Seven 25KVA 120/240 Volt Dead Front Single Phase Pad Mounted Distribution Transformers

_____/Each

(12) Twelve 50KVA 120/240 Volt Dead Front Singe Phase Pad Mounted Distribution Transformers

_____/Each

(3) Three 75KVA 120/240 Volt Dead Front Single Phase Pad Mounted Distribution Transformers

_____/Each

(1) One 100KVA 120/240 Volt Dead Front Single Phase Pad Mounted Distribution Transformers

_____/Each

DELIVERY:_____

TERMS AND STANDARD CONDITIONS
CITY OF NORTH LITTLE ROCK, ARKANSAS

PLEASE READ CAREFULLY

1. When submitting an "Invitation to Bid," the bidder warrants that the commodities covered by the bid shall be free from defects in material and workmanship under normal use and service. In addition, bidder must deliver new commodities of the latest design and model, unless otherwise specified in the "Invitation to Bid."

2. Prices quoted are to be net process, and when an error is made in extending total prices, the City may accept the bid for the lesser amount whether reflected by extension or by the correct multiple of the unit price.

3. Discounts offered will be taken when the City qualifies for such. The beginning date for computing discounts will be the date of invoice or the date of delivery and acceptance, whichever is later.

4. When bidding other than the brand and/or model specified in the "Invitation to Bid," the brand and/or model number must be stated by that item in the "Invitation to Bid," and descriptive literature be submitted with the bid.

5. The City reserves the right to reject any and all bids.

6. The Purchasing office reserves the right to award items, all or none, or by line item(s).

7. Quality, time and probability of performance may be factors in making an award.

8. Bid quotes submitted will remain firm for 30 calendar days from bid opening date; however, the prices may remain firm for a longer period of time if mutually agreeable between bidder and the Department of Commerce and Governmental Relations.

9. Bidder must submit a completed signed copy of the front page of the "Invitation to Bid" and must submit any other information required in the "Invitation to Bid."

10. In the event a contract is entered into pursuant to the "Invitation to Bid," the bidder shall not discriminate against any qualified employee or qualified applicant for employment because of race, sex, color, creed, national origin or ancestry. The bidder must include in any and all subcontracts a provision similar to the above.

11. Sales or use tax is not to be included in the bid price, but is to be added by the vendor to the invoice billing to the City. Although use tax is not to be included in this bid, vendors are to register and pay tax direct to the Arkansas State Revenue Department.

12. Prices quoted shall be "Free on Board" (F.O.B.) to destination at designated facility in North Little Rock. Charges may not be added after the bid is opened.

13. In the event of two or more identical low bids, the contract may be awarded arbitrarily or for any reason to any of such bidders or split in any proportion between them at the discretion of the Department of Commerce and Governmental Relations.

14. Specifications furnished with this Invitation are intended to establish a desired quality or performance level, or other minimum dimensions and capacities, which will provide the best product available at the lowest possible price. Other than designated brands and/or models approved as equal to designated products shall receive an equal consideration.

15. Samples of items when required, must be furnished free, and, if not called for within 30 days from date of bid opening, will become property of the City.

16. Bids will not be considered if they are: 1. Submitted after the bid's opening time. 2. Submitted electronically or faxed I (unless authorized by Purchasing Agent).

17. Guarantees and warranties should be submitted with the bid, as they may be a consideration in making an award.

18. **CONSTRUCTION**

A. Contractor is to supply the City with evidence of having and maintaining proper and complete insurance, specifically Workman's Compensation Insurance in accordance with the laws of the State of Arkansas, Public Liability and Property Damage. All premiums and cost shall be paid by the Contractor. In no way will the City be responsible in case of accident.

B. When noted, a Certified check or bid bond in the amount of 5% of total bid shall accompany bid.

C. A Performance Bond equaling the total amount of any bid exceeding $10,000.00 must be provided for any contract for the repair, alteration or erection of any public building, public structure or public improvement (pursuant to Act 351 or 1953 as amended by Act 539 of 1979).

19. **LIQUIDATED DAMAGES** - Liquidated damages shall be assessed beginning on the first day following the maximum delivery or completion time entered on this bid form and/or provided for by the plans and specifications.

20. **AMBIGUITY IN BID** - Any ambiguity in any bid as the result of omission, error, lack of clarity or non-compliance by the bidder with specifications, instructions, and all conditions of bidding shall be construed in the light most favorable to the City.

21. The bid number should be stated on the face of the sealed bid envelope. If it is not, the envelope will have to be opened to identify.

22. Whenever a bid is sought seeking a source of supply for a specified period of time for materials and services, the quantities of usage shown are estimated ONLY. No guarantee or warranty is given or implied by the participants as to the total amount that may or may not be purchased from any resulting contracts. These quantities are for the bidders information ONLY and will be used for tabulation and presentation of bid and the participant reserves the right to increase or decrease quantities as required.

23. The City of North Little Rock reserves the right to reject any and all bids, to accept in whole or in part, to waive any informalities in bids received, to accept bids on materials or equipment with variations from specifications in those cases where efficiency of operation will not be impaired, and unless otherwise specified by the bidder, to accept any item in the bid. If unit prices and extensions thereof do not coincide, the City of North Little Rock may accept the bid for the lesser amount whether reflected by the extension or by the correct multiple of the unit price.

24. Additional information or bid forms may be obtained from:
COMMERCE DEPARTMENT, 120 Main Street, P.O. Box 5757, North Little Rock, Arkansas 72119 (501) 975-8881 www.nlr.ar.gov

Bidding documents must be submitted on or before the bid's opening date and time. Unless noted, sealed bids must be submitted to the Commerce Department at 120 Main Street, North Little Rock, AR 72114 or PO Box 5757, North Little Rock, AR 72119

NLR ELECTRIC DEPARTMENT
PAD MOUNT TRANSFORMERS

SPECIFICATIONS ARE ATTACHED.

Questions regarding the specifications and/or requirements should be directed to Greg Woodward at 501-992-4073.
Questions regarding shipping and receiving should be directed to Karen Allen at 501-992-4058.

- Vendors please note changes made to *Three-Phase Dead Front Pad Mounted Transformer with Alternate/Loop Feed Switching* - 7.0 FINISH REQUIREMENTS item 7.3 on Page 6 of the Specifications.
- **Must notify NLRED 48 hours prior to delivery.**
- Delivery Requirements: Delivery to be made to NLRED Palm Street location (830 N Palm St. {*Google Map Location is 959 N Palm St.})N Little Rock, AR, 72114.
- Delivery contacts: Karen Allen-Storeroom at 501-992-4058 or Greg Woodward at 501-992-4073.
- Note receiving times are: 8:00AM – 2:00PM, Monday – Friday.

NOTE: FAILURE TO FILL OUT AND SIGN THE INVITATION TO BID SHEET WILL RESULT IN REJECTION OF THE BID.

DEAD FRONT SINGLE PHASE PAD-MOUNTED

DISTRIBUTION TRANSFORMERS

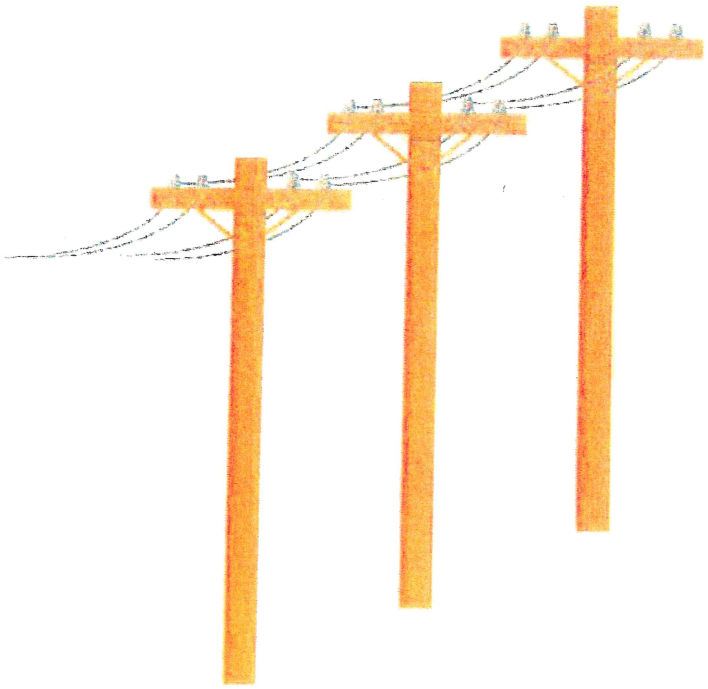

NORTH LITTLE ROCK ELECTRIC DEPARTMENT

1400 W. MARYLAND

P.O. BOX 159

NORTH LITTLE ROCK, AR 72115

(501) 372-0100

NORTH LITTLE ROCK ELECTRIC DEPARTMENT

DEAD FRONT SINGLE PHASE PAD-MOUNTED DISTRIBUTION TRANSFORMERS

1.0 SCOPE

1.1 This specification covers the electrical characteristics and mechanical features of single-phase, 60Htz, mineral-oil-immersed, self-cooled, pad-mounted compartmental type distribution type transformers, rated 25Kva through 167Kva. High voltage for operation between one phase and grounded neutral.

1.2 All characteristics, definitions and terminology, except as specifically covered in this specification, shall be in accordance with the *American National Standards Institute*, Standards C57.12.00, C57.12.20 and C57.12.80, latest revisions thereof.

2.0 RATINGS

2.1 kilovolt-Ampere Rating Shall Be:

25	100
50	167
75	250

As specified.

2.2 High Voltage Rating Shall Be:

13200 GRD.Y/7620

As specified.

2.3 Low Voltage Rating Shall Be:

240/120

2.4 No taps shall be provided.

3.0 Insulation level and dielectric test levels

3.1 the high voltage insulation shall have a Basic Impulse Level (BIL) of:

Voltage Rating	BIL
13200 GRDY/7620	95

3.2 The low voltage insulation shall have a Basic Impulse Level (BIL) of 30Kv and be of the 1.2 kV insulation class.

3.3 Dielectric test levels shall be in accordance with the distribution levels of section 4 in *ANSI Standard C57.12.00.*

4.0 Temperature rise limits for continuous ratings

4.1 Kilovolt-ampere ratings are continuous and based on not exceeding a 65° Celsius average winding temperature rise or an 80° Celsius hot spot temperature rise. The temperature rise of the insulating oil shall not exceed 65° Celsius when measured near the top of the tank.

4.2 The above temperature rises are based on an altitude not exceeding 3000ft. (1000 meters).

5.0 Testing

5.1 Routing tests on all transformers shall be made as specified in *ANSI Standard C57.12.00.* ANSI test code C57.12.90 shall be followed for all testing procedures.

6.0 Construction

6.1 General

6.1.1 The pad-mounted compartmental type transformer shall consist of the transformer tank and the high-voltage and low-voltage terminating compartment. The two components shall be assembled as an integral unit. Tamperproof and weatherproof suitable for mounting on a pad without additional housing, fences, or other provisions to make the unit safe.

6.1.2 Transformer door shall interlock with the front sill and be equipped for pad locking. Provision shall be made for securing transformer to a concrete pad.

6.1.3 Stainless steel hinges and an easily removable door which can only be removed after removing a set screw or similar locking device shall be provided.

6.1.4 Construction of the unit shall be such that it can be lifted, skidded, or slid into place on the mounting pad without disturbing the entrance cables.

6.1.5 Minimum opening in the bottom of the high-voltage and low-voltage compartments.

6.2 Finish Introduction

6.2.1 The object of this specification is to describe a high quality coating system for carbon steel pad-mounted equipment, providing long field life with a minimum maintenance. The coating shall have excellent weathering characteristics with a minimum of chalking, high resistance to corrosive environments such as salt spray, and a high resistance to abrasion, scratching, and chipping. More stringent performance requirements may be needed to provide long field life in severe environments.

6.3 Equipment design objectives

6.3.1 The equipment shall be designed to minimize areas where water and corrosive elements can accumulate.

6.3.2 All welds shall be treated to prepare the weld surfaces for coating. Weld splatter shall be removed.

6.3.3 The manufacturer shall provide a method of shipment that will allow the equipment to be received by the purchaser such that it still meets the performance tests required by this specification.

6.3.4 The manufacturer shall provide a means, preferably as an inherent part of the equipment, to minimize scratching of the coating on the base of the equipment during handling and installation.

6.4 Finish Requirements

6.4.1 All coated surfaces on the exterior of the cabinet shall be capable of meeting the performance tests required by this specification.

6.4.2 If more than one coating system is used for different areas of the equipment, the areas where each is used shall be identified. For each coating system, the method of surface preparation, method of coating, minimum dry build thickness and curing cycle of each coating, the minimum dry build thickness of the total coating system and laboratory test performance data of the total coating system per this specification shall be submitted to the user for approval upon request. This data shall be resubmitted to the user whenever there are significant departures from these methods and/or materials. It shall be the responsibility of the user to perform any additional testing not required by this specification.

6.4.3 The top coat color shall be *Munsell 7GY 3.29/1.5 Green.*

6.4.4 Touch-up shall on final inspection before any equipment is shipped. In areas where the integrity of both the primer and the finish coat is violated, touch-up shall be with both primer and finish coat. In all cases, the final coat touch-up shall blend smoothly with the original finish.

6.4.5 The coating system maintenance procedure shall be recommended by the manufacture.

6.5 Test specimens

6.5.1 Substrates shall consist of panels of the same material, lightest gauge and processing as used in production. All panels shall be cleaned, coated, and cured using the production coating system.

6.6 BUSHING AND TERMINALS

6.6.1 Electrical characteristics of transformer bushings and terminals shall be as listed below:

BIL	60 Hertz Dry one-minute withstand
30 KV	10 KV
95 KV	35 KV
150 KV	50 KV

6.6.2 Bushings and terminals shall be located on the tank wall that is common to the high-voltage and low-voltage compartments. The location and arrangement shall be as shown in fig. 1.

6.6.3 Two high-voltage bushings wells shall be externally clamped to the tank and connected internally for loop feed as shown in fig. 3. The bushing wells shall be:

13200 GRDY/7620

Elastimold K1601-PC-S2
CMC 3-701981-50
CMC 3-7022-1165
Or approved equivalent.
Cooper Power Systems BW150F

6.6.4 The high-voltage bushing wells shall be equipped with the following load-break inserts:

13200 GRDY/7620

Elastimold NO. 1601-A3
G. E. NO. 9U02AAB001 OR
RTE NO. 26014797BOIM (LBI215)

6.6.5 A cable accessory mounting bracket for use with the test/grounding bushing and parking bushing shall be supplied on the transformer tank as shown in fig. 1.

6.6.6 Low-voltage bushings (line and neutral) shall be externally clamped with threaded copper stud; thread size and type as shown in fig. 2. The minimum stud length "L" shall be the thread available for user furnished accessory connectors and terminals, exclusive of ground strap or other apparatus connections installed by the manufacturer. A tin-platted copper 4-hole NEMA "H" spade threaded connector, complete with jam nut, shall be furnished, having dimensions as shown in fig. 2, and positioned at 60° as shown in fig. 1.

6.6.7 The neutral end of the high-voltage winding shall be connected to the tank internally and shall be securely grounded to the tank and shall be independent of all other connections.

6.6.8 The neutral connection (X) of the low-voltage winding shall be brought out on an insulated bushing and grounded to the ground connection in the low-voltage compartment with a removable ground strap connected to a pad provided for grounding or grounded to the tank, and shall be independent of all other connections. The ground strap shall be adequate to carry the maximum available fault current.

6.6.9 Automatic pressure relief device shall be provided with pull ring for manual operation, Qualitrol No. 202-030-01 or approved equivalent, and shall be positioned above the 105° oil level.

6.7 Switching – fault protection

6.7.1 The transformer shall be equipped with a MagneX™ Interrupter, or approved equivalent, to provide protection against secondary faults or overloads, and provide "on" or "off" switching for the transformer. The interrupter shall be mounted on the upper portion of the of the high-voltage tank wall with switch position label.

6.7.2 The transformer shall be constructed with two, hot-stick operable, primary voltage switches under oil. The switches shall be located above each high-voltage bushing well. Switch 1 and switch 2 shall function as a

continuous and load breaking device from; source A, or source B or source A&B. these two position load break switches must be clearly identified in the cable compartment by a suitable method such that the identification marks cannot be removed under any operating conditions.

6.8 Liquid level markings

6.8.1 The fill plug should be located at the correct oil level at 25° Celsius.

6.9 Handling and mounting facilities

6.9.1 Rolling provision. The transformer base shall be arranged for rolling in two directions – parallel to and at right angle to the centerline of the transformer.

6.9.2 Lifting provision. Lifting provisions shall be 5/8" – 11 threaded flush mounted inserts of corrosion-resistant material, and so arranged to provide a suitable, balanced lift for the completely assembled unit.

6.9.3 Mounting provision. The base of the assembly shall be provided with a suitable flange as shown in fig. 1 to permit anchoring the unit on a pad from within the cable terminating compartments.

7.0 Terminal marking

7.0.1 Terminal designations shall be as defined by *ANSI Standard Terminal Markings and Connections for Distribution and Power Transformers C57.12.70*. The high and low voltage terminal and designations there from are shown in fig. 1 and must be decals or stenciled on tank wall.

7.0.2 The identification of terminal connections shall be shown on the instruction nameplate.

7.1 Instruction nameplate

7.1.1 The instruction nameplate shall be at a convenient location on the front of the transformer tank wall.

7.1.2 The information specified in *Section 9, Nameplate A, of the ANSI Standard C57.12.00* shall be permanently shown on the instruction nameplate.

7.1.3 The voltage designations shall be in accordance with *9.4.3 of ANSI Standard C57.12.00.*

7.1.4 The nameplate shall be constructed of corrosion-resistant material.

7.1.5 The nameplate shall include the true date of manufacture, month and year (example: 03 80). No codes will be acceptable.

7.2 Oil and oil preservation

7.2.1 A sealed tank system shall be standard on all transformers.

7.2.2 A sealed tank system is one in which the interior of the transformer will be sealed from the atmosphere throughout its top oil temperature range, and in which the gas plus the oil volume remains constant. The transformer will remain effectively sealed throughout a top oil temperature range of minus 5° Celsius to plus 105° Celsius provided the initial liquid level has been properly adjusted.

7.2.3 Permanent identification of the PCB content of the oil shall be provided either by statement on the nameplate of permanent decal on the inside of the front wall. It is preferred the manufacture guarantee the oil at the time of manufacture to contain no PCB; however a maximum of less than 50PPM as allowed by present requirements for NON-PCB equipment is acceptable.

7.3 Tanks

7.3.1 The tank shall be a minimum of 12 gauge sheet steel sufficient to withstand a minimum pressure of 7 PSI. gauge without permanent distortion.

7.3.2 Tank grounding provisions shall consist of two steel pads with ½" 13NC tapped holes, 7/16" deep and welded on the transformer base or on the tank wall, one on the low-voltage side and one on the high-voltage side. The grounding provisions shall be capped before painting the unit. Two eye-bolt connectors shall be included.

7.3.3 (Adding coal tar epoxy undercoating to the bottom of the unit does not enhance the corrosion properties of the paint system and shall not be provided.)

7.3.4 The manufacturer's logo shall be located on the outside of the unit before painting, in the near vicinity if the locking arrangement as shown in fig. 5.

7.4 **Information required with proposal**

7.5 Certified data showing conformance to the requirements, paragraph 5.1.

7.6 Guaranteed average values for no load losses, load losses and percent impedance voltage shall be quoted in accordance with the following:

7.6.1 No load loss shall be at 105% rated voltage and ambient temperature of 20°-25° Celsius with top oil temperature not exceeding 25° Celsius.

7.6.2 Load losses shall be at 85° Celsius average winding temperature at rated KVA and rated voltage.

7.6.3 Percent impedance voltage shall be at 85° Celsius average winding temperature.

7.7 Guaranteed maximum temperature rise for each item (design) being quoted. Certified test data shall be provide, as specified in the inquiry, in accordance with *ANSI C57.12.90-1980, Section 11.*

7.8 Outline drawings, weights, dimensions, and accessory locations for each KVA and voltage rating.

7.9 A statement that all the requirements of this specification will be met or a statement which completely described the expectations in the vendor's product.

8.0 Sample of proposed PCB identification.

8.1 Alternate proposals will be given considerations.

8.2 Prior approval on previous order shall not constitute approval of a new order without submission of a complete new proposal.

8.3 North Little Rock Electric Department's distribution engineering section shall be the sole authority for interpretation of this specification.

8.4 **Date required upon receipt of order**

8.5 Outline drawings, weights and dimensions for approval of each voltage and KVA rating.

8.6 A report shall be submitted quarterly listing each transformer shipped by serial number. The transformers shall be grouped by voltage and KVA rating and contain the actual tested no load losses at 20°-25° Celsius ambient at 105% rated voltage, winding losses corrected to 85° Celsius. Each stock number shall be summarized at the end of the blanket year with the total number of units shipped and the average of their losses.

PADMOUNT SPECIFICATIONS

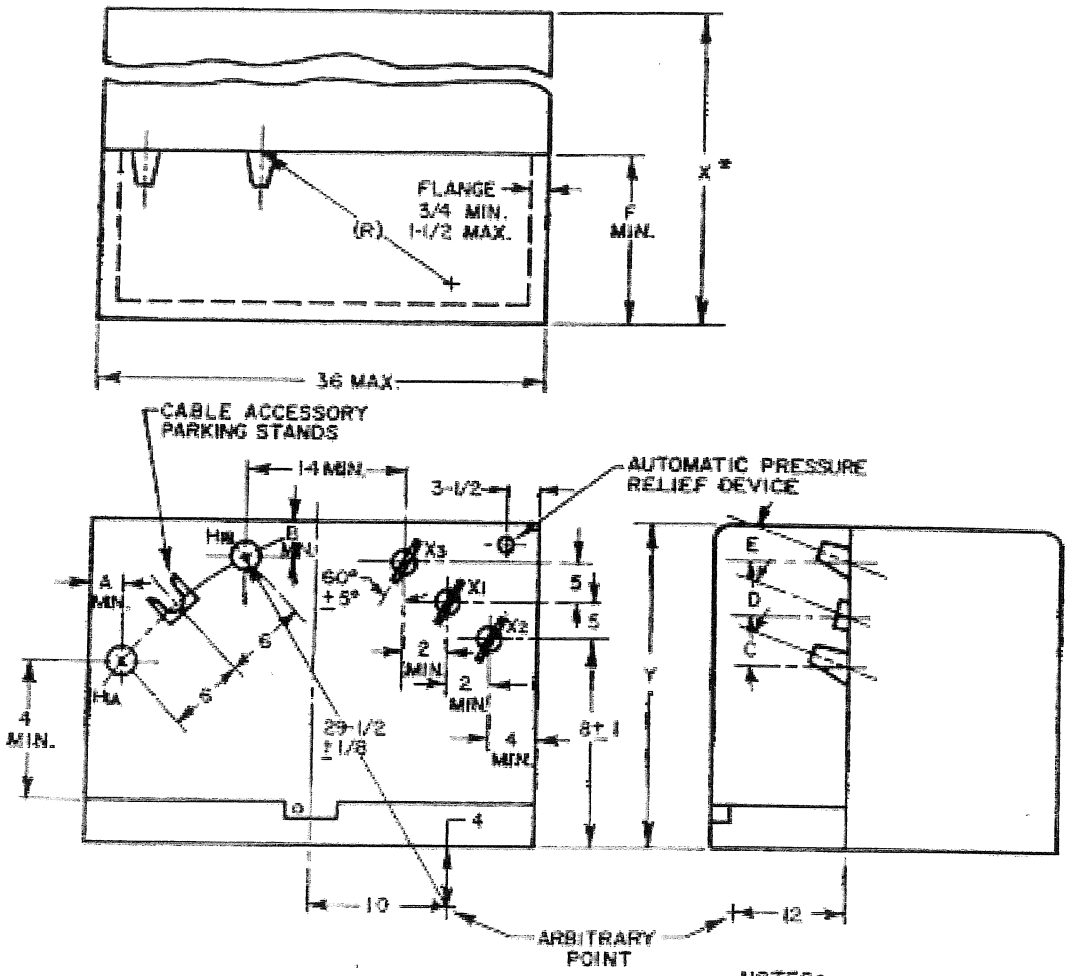

PHASE TO GROUND RATING

	7.2, 7.6 KV	19.92 KV
A	3-1/2	4
B	4	5-3/4
C	12-1/2°	12-1/2°
D	12-1/2°	12-1/2°
E	12-1/2°	0°
F	15	19

	MAX. CABINET DIMENSIONS			
	25 – 75 KVA		100-125 KVA	
	7.2, 7.6	19.9	7.2, 7.6	19.9
X	38	40	42	44
Y	24	34	32	34
*	EXCLUDING FINS			

NOTES:

1. ALL DIMENSIONS, UNLESS OTHERWISE SPECIFIED, ARE IN INCHES.
2. DIMENSIONAL TOLERANCES
   ± 1/2" – LINEAR
   ± 1° – ANGULAR
   UNLESS OTHERWISE SPECIFIED.

FIGURE 1

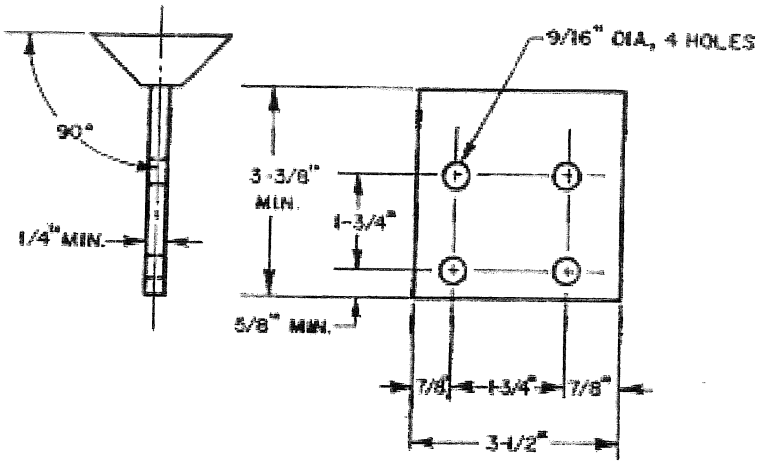

KVA	THREAD SIZE	MIN. L
25-75	0.625-11 UNC-2A	1.25"
100-167	1.000-14 UNC-2A	1.75"

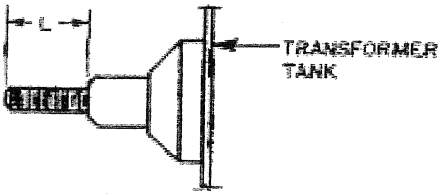

FIGURE 2
LOW VOLTAGE COPPER
TERMINAL DETAILS

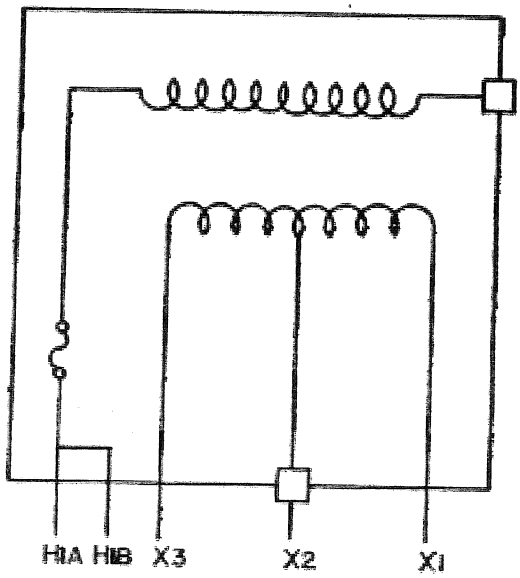

FIGURE 3

INTERNAL CONNECTIONS & TERMINAL DESIGNATIONS

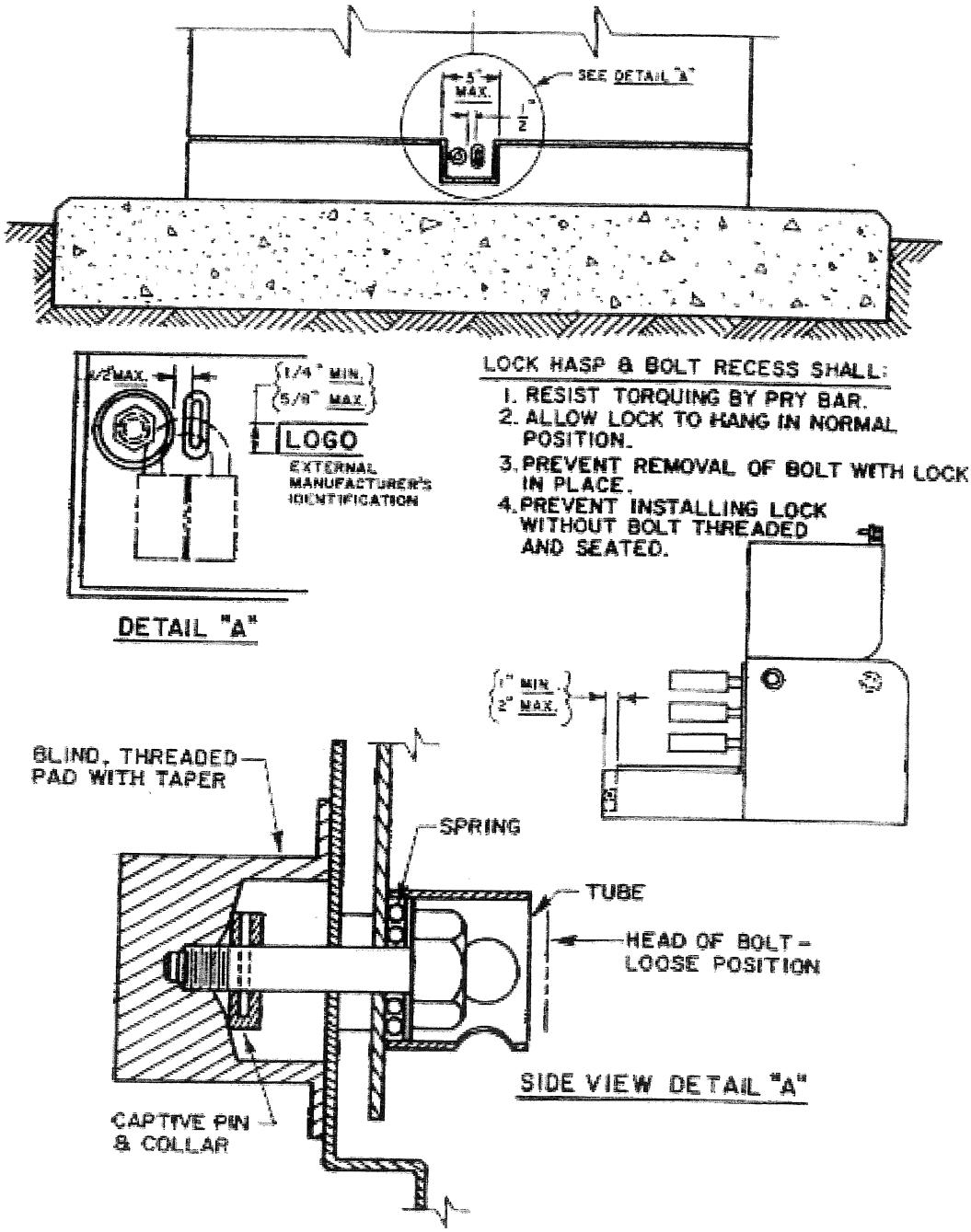

FIGURE 5
LOCKING PROVISION

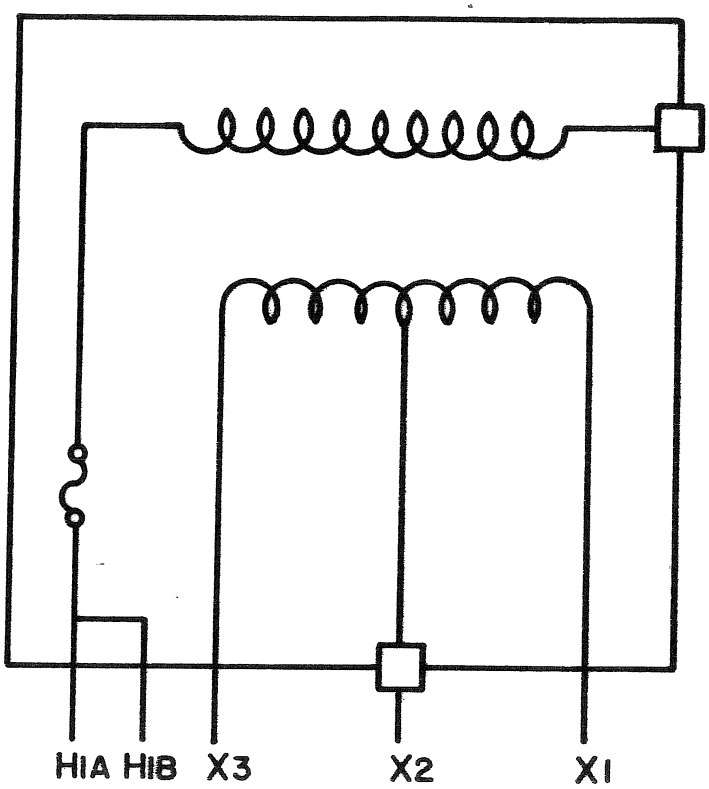

FIGURE 3

INTERNAL CONNECTIONS & TERMINAL DESIGNATIONS

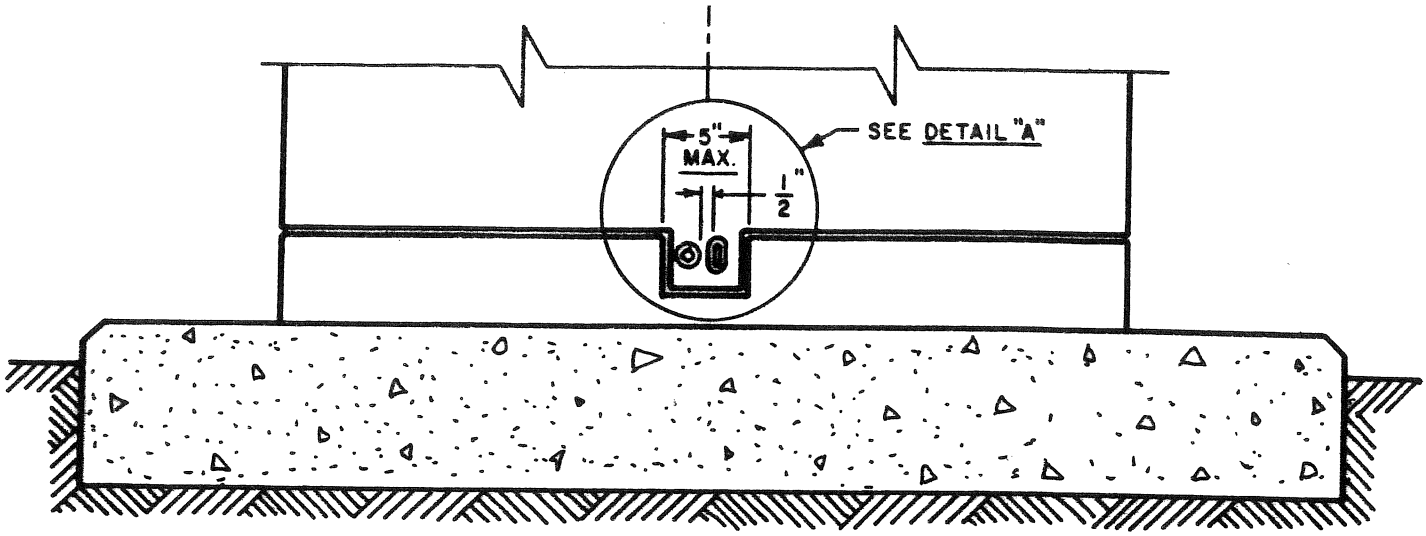

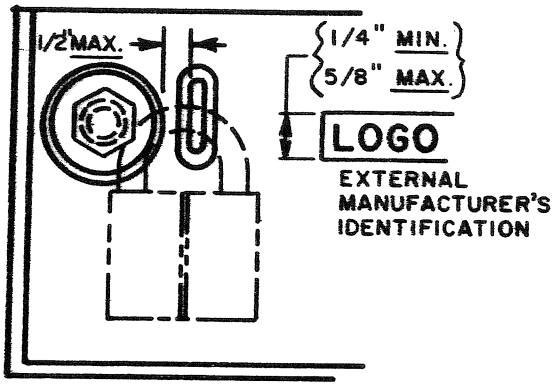

DETAIL "A"

LOCK HASP & BOLT RECESS SHALL:

1. RESIST TORQUING BY PRY BAR.
2. ALLOW LOCK TO HANG IN NORMAL POSITION.
3. PREVENT REMOVAL OF BOLT WITH LOCK IN PLACE.
4. PREVENT INSTALLING LOCK WITHOUT BOLT THREADED AND SEATED.

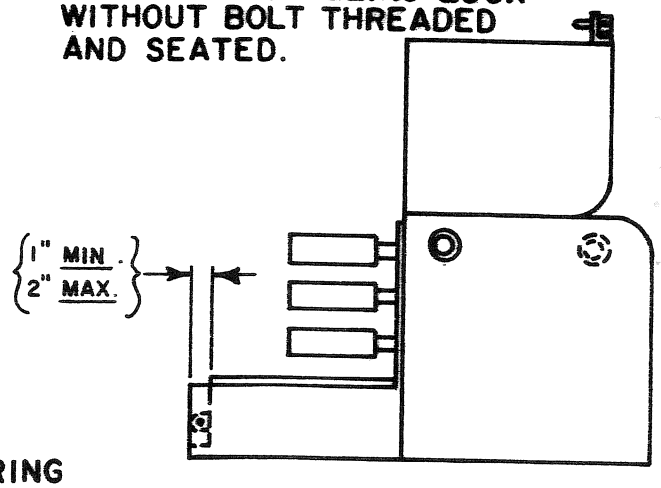

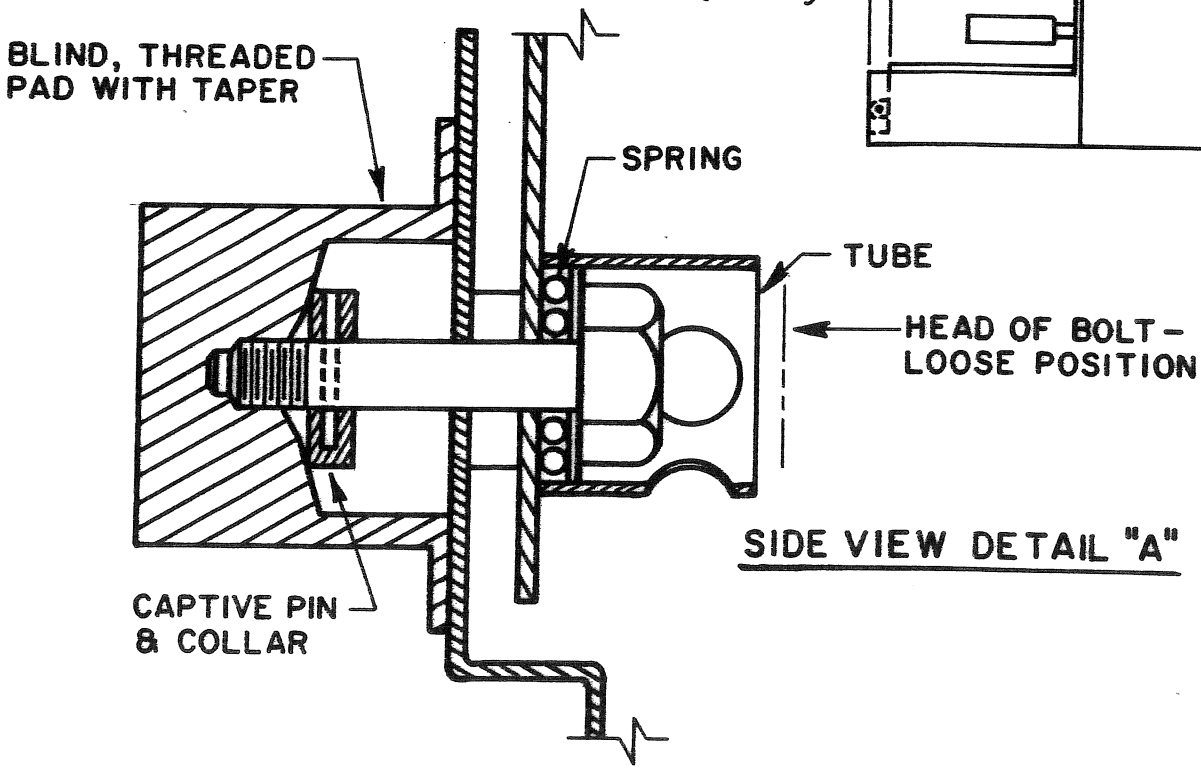

SIDE VIEW DETAIL "A"

FIGURE 5
LOCKING PROVISION

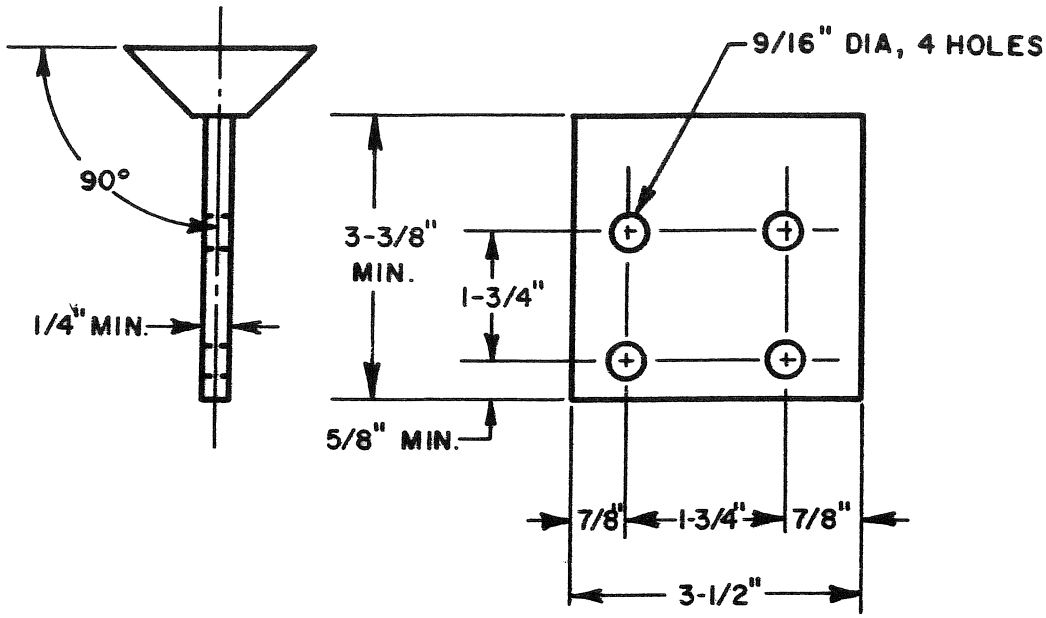

KVA	THREAD SIZE	MIN. L
25-75	0.625-11 UNC-2A	1.25"
100-167	1.000-14 UNC-2A	1.75"

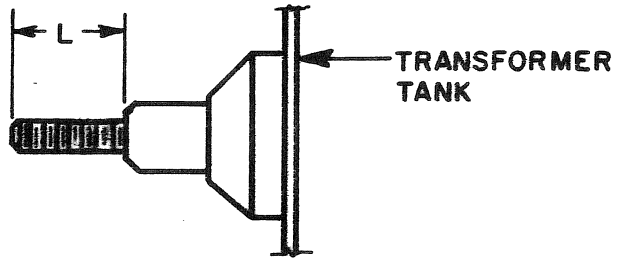

FIGURE 2

LOW VOLTAGE COPPER

TERMINAL DETAILS

SINGLE PHASE DEAD FRONT PADMOUNT SPECIFICATIONS

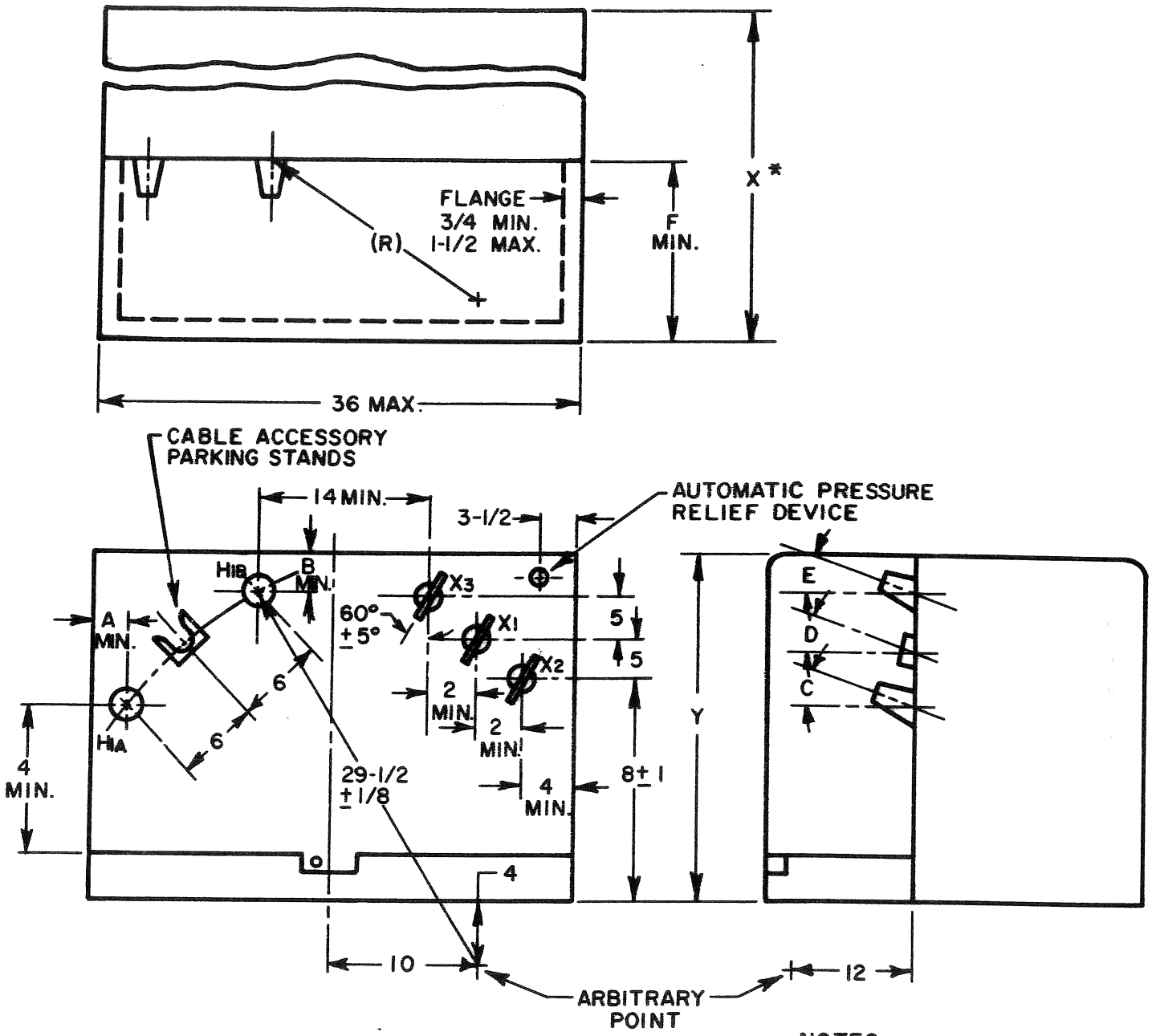

PHASE TO GROUND RATING

	7.2, 7.6KV	19.92KV
A	3-1/2	4
B	4	5-3/4
C	12-1/2°	12-1/2°
D	12-1/2°	12-1/2°
E	12-1/2°	0°
F	15	19

	MAX. CABINET DIMENSIONS			
	25 – 75 KVA		100-125 KVA	
	7.2, 7.6	19.9	7.2, 7.6	19.9
X	38	40	42	44
Y	24	34	32	34
*	EXCLUDING FINS			

NOTES:

1. ALL DIMENSIONS, UNLESS OTHERWISE SPECIFIED, ARE IN INCHES.
2. DIMENSIONAL TOLERANCES:
   ± 1/2" – LINEAR
   ± 1° – ANGULAR
   UNLESS OTHERWISE SPECIFIED.

FIGURE 1